METRIC

KSC-STD-E-0009B
September 21, 1993
Supersedes
KSC-STD-E-0009A
November 15, 1968

CABLE NUMBERING, OUTSIDE PLANT COMMUNICATION SYSTEM, STANDARD FOR

ENGINEERING DEVELOPMENT DIRECTORATE

National Aeronautics and
Space Administration

John F. Kennedy Space Center

KSC FORM 16-12 (REV. 7/92)

TRANSMITTAL SHEET

TO:	DATE
Distribution	May 26, 2000

MATERIAL TRANSMITTED

Change B-1: KSC-STD-E-0009B, Cable Numbering, Outside Plant Communication System, Standard for

Please make the following pen/ink changes to the referenced document:

Page 2, Paragraph 3.1.2.1.1, first sentence: Add "and 101 to 199" to the end of the sentence after "99."

Page 2, Paragraph 3.1.2.1.1, add to "Primary MDF Locations" column in the "Cable Number Allocated" column:

01 thru 29, add "and 101 thru 129"
30 thru 59, add "and 130 thru 159"
60 thru 85, add "and 160 thru 185"

Page 3, Figure 1: Add new note 4 after NOTE 3: "4, New underground and buried feeder cable shall list insulation type, type of filling compound, shielding system, type of inner jacket, and type of outer jacket.

John Shramko
TA-D3

FILING INSTRUCTIONS

KSC-STD-E-0009B
September 21, 1993

Supersedes
KSC-STD-E-0009A
November 15, 1968

CABLE NUMBERING, OUTSIDE PLANT COMMUNICATION SYSTEM, STANDARD FOR

Approved By:

Walter T. Murphy
Director of Engineering Development

JOHN F. KENNEDY SPACE CENTER, NASA

P2/WP51/KSC0009B

TABLE OF CONTENTS

Section	Title	Page
1.	SCOPE	1
2.	APPLICABLE DOCUMENTS	1
3.	REQUIREMENTS	1
3.1	Requirements for Copper Cable (Audio and Video)	1
3.1.1	General Requirements	1
3.1.1.1	Cable Numbering Procedures	1
3.1.1.2	Cable Designator	2
3.1.2	Detailed Requirements	2
3.1.2.1	Cable Numbering	2
3.1.2.1.1	Main Feeder Cables	2
3.1.2.1.2	Distribution Cables	4
3.1.2.1.2.1	Distribution Cable Spliced Directly to Feeder Cable	4
3.1.2.1.2.2	Distribution Cable Connected to Feeder Cable Through a Cross-Connecting Terminal	4
3.1.2.1.2.3	Distribution Cable Connected to Feeder Cable Through a Straight-Connecting Protected Terminal	4
3.1.2.1.2.4	Distribution Cable Connected to a Main Feeder Through More Than One Cross-Connecting Terminal	4
3.1.2.1.3	Tie Cables	4
3.1.2.1.4	Building Cables	4
3.1.2.1.4.1	House Cables	9
3.1.2.1.4.2	Technical Systems Cables	9
3.1.2.1.4.3	Multipled House or Technical Systems Cables	9
3.1.2.2	Numbering Audio Cable Distribution Frames	9
3.1.2.3	Numbering Wideband Terminals	13
3.2	Requirements for Fiber Cable	18
4.	QUALITY ASSURANCE PROVISIONS	19
5.	PREPARATION FOR DELIVERY	19
6.	NOTES	19
6.1	Intended Use	19
6.2	Definitions	19

LIST OF ILLUSTRATIONS

Figure	Title	Page
1	Typical Cable Designations	3
2	General Cable Numbering Scheme	5
3	Cable Number and Pair Count When Using Cross-Connect Terminal	6
4	Cable Number and Pair Count When Using Straight-Connect Terminal	6
5	Cable Numbering Scheme, Cross-Connect Terminals in Series	7
6	Numbering Tie Cables Between Subsidiary MDF's Fed by Separate Feeder Cables	7
7	Numbering Cables in a Building Where One or More Distributing Points Are Used	8
8	Numbering Cables in a Building Where One or More Cross-Connect Terminals Are Used	10
9	House or Technical System Cable Originating on Horizontal Side of Main Frame	11
10	Typical Premise Wiring Distribution	11
11	Method for Designating House Cables and Technical Service Cables When More Than One Cable is Terminated on a Line Terminal Block	12
12	Audio Cable Distributing Frames, KSC Industrial Area	14
13	Audio Cable Distributing Frames, Launch Complex 39	15
14	Wideband Number Assignments, KSC Industrial Area	16
15	Wideband Terminal Number Assignments, LC-39	17

ABBREVIATIONS AND ACRONYMS

ASP	aluminum steel polyethylene
Bldg	building
BOB	Base Operations Building
BRRS	Banana River Repeater Station
CA	designation for audio cable
CDSC	Communications Distribution and Switching Center
CFP	customer face plate
CIF	Central Instrumentation Facility
Comm	communication
D	data serving CFP's
dB/km	decibels per kilometer
DDF	data distribution frame
DS	data serving racks
DTA	double tape armor
EDL	Engineering Development Laboratory
ELSSE	Environmental Life Support Systems Equipment
Envir.	environmental
FM	fiber-optic cable, multimode
FOT	fiber-optic terminal
FS	fiber-optic cable, single-mode
GHz/km	gigahertz per kilometer
HC	house cable
HMF	Hyperhgol Maintenance Facility
HP	high pressure
HQ	Headquarters (Building)
HRT	high-resolution tracker
HS	high-speed data
HSDF	high-speed data frame
IDF	intermediate distribution frame
INTF	interface
INSTR	instrumentation
KSC	John F. Kennedy Space Center
LACB	Landing Aids Control Building
LCC	Launch Control Center
LC-39	Launch Complex 39
LCPI	lead covered paper insulated
LUT	Launch Umbilical Tower
M&O	Maintenance and Operations (Building)
MAINT	maintenance
MDF	main distribution frame
MHz/km	megahertz per kilometer

ABBREVIATIONS AND ACRONYMS (cont)

MLP	Mobile Launcher Platform
MSS	Mobile Service Structure
NASA	National Aeronautics and Space Administration
NEMA	National Electrical Manufacturers Association
nm	nanometer
O&C	Operations and Checkout (Building)
OSB	Operations Support Building
OSRFR	Operations Support Room, Firing Rooms
PCC	Processing Control Center
PSCN	Program Support Communications Network
PTCR	Pad Terminal Connection Room
PVC	polyvinyl chloride
RM	room
SAEF	Spacecraft Assembly and Encapsulation Facility
SLF	Shuttle Landing Facility
SRB	Solid Rocket Booster
STAL	Stalpeth (jacket or sheath)
STOR	storage
T, TEL	telephone
TBD	to be determined
TD	terminal distributor
TEL4	Central Telemetry, Site 4
TERM	terminal
TS	technical systems
TTC	telephone terminal cabinet
UCS	Universal Camera Site
USB	unified S-band
VAB	Vehicle Assembly Building
VABR	VAB Repeater (Station)
VERT	vertical
VIC	Visitors Information Center
WB	wideband
WBT	wideband terminal
µm	micrometer

CABLE NUMBERING, OUTSIDE PLANT COMMUNICATION SYSTEM, STANDARD FOR

1. SCOPE

This standard establishes the approved method for numbering all cables within the outside plant portion of the fixed wire communications system at the John F. Kennedy Space Center (KSC). This standard is intended to accomplish the following:

a. Standardize and direct cable numbering procedures for outside plant cabling at KSC.

b. Provide systematic numbering of all audio cable main distribution frame (MDF), wideband terminal (WBT), and fiber-optic terminal (FOT) cables and end locations.

2. APPLICABLE DOCUMENTS

The following documents form a part of this document to the extent specified herein. When this document is used for procurement, including solicitations, or is added to an existing contract, the specific revision levels, amendments, and approval dates of said documents shall be specified in an attachment to the Solicitation/Statement of Work/Contract.

Governmental.

Specifications.

John F. Kennedy Space Center (KSC), NASA

79K28125	Fiber Optic Cable Specification for Kennedy Space Center

3. REQUIREMENTS

3.1 Requirements for Copper Cable (Audio and Video).

3.1.1 General Requirements.

3.1.1.1 Cable Numbering Procedures. - The cable numbering procedures specified herein conform to industry standards, supplemented with criteria developed

specifically for numbering cables in that part of the outside plant peculiar to the KSC operation.

3.1.1.2 Cable Designator. - Individual cables in the outside plant shall be uniquely identified by assignment of a cable designator to each cable. The cable designator shall include the cable prefix, cable number, cable type, the number of cable pairs (by individual sheath), gauge of the conductors, and cable pair count. This information is essential for the identification of cables and for day-to-day maintenance of the cable plant. It further provides necessary information for engineering extensions and rearrangements to the existing plant. Typical cable designators for audio, wideband, and composite audio/wideband cables are shown in figure 1.

3.1.2 Detailed Requirements.

3.1.2.1 Cable Numbering.

3.1.2.1.1 Main Feeder Cables. - Main underground and buried feeder cables, originating from primary MDF's and WBT's, shall be assigned numbers 01 to 99. Numbers assigned to audio cables may be prefixed with the letters CA. Numbers assigned to wideband (WB) cables shall be prefixed with the letters WB. Blocks of cable numbers have been assigned to primary MDF's and WBT's in the following manner:

Primary MDF Locations	MDF Number	Cable Number Allocated
CD&SC	1	01 thru 29
VABR	50	30 thru 59
LC-39 LCC	51	60 thru 85

Primary WBT Locations	WBT Number	Cable Number Allocated
CD&SC	WBT-1	01 thru 19
VABR	WBT-50	20 thru 39
LC-39 LCC	WBT-51	40 thru 59

A. TYPICAL AUDIO CABLE DESIGNATOR

2-22	Number of hundreds and gauge listed
0203:201-375	Cable number and pair identification listed
25 DD	Number of unconnected pairs listed

B. TYPICAL WIDEBAND CABLE DESIGNATOR

36X16	Number of pairs and gauge listed
WB06:37-60	Cable number and pair identification listed
4X DD	Number of unconnected pairs listed
WB0601:1-8	Cable number and pair identification listed

C. TYPICAL COMPOSITE CABLE DESIGNATOR

2-19+12-16	Number of audio hundreds and gauge listed plus number of wideband pairs and gauge listed
08:1-200	Cable number and pair identification listed
WB37:37-46	
2X DD	Number of unconnected pairs listed

D. TYPICAL IN/OUT DESIGNATOR

3-22	Number of hundreds and gauge listed
09:101-200 IN/OUT	Cable number and pair identification in and additional pair identification out
100 DD	Number of unconnected pairs listed

NOTES:

1. Sheath type not required - existing may be shown as follows:

LCPI	-	Lead covered paper insulated
DTA	-	Double tape armor
STAL	-	Stalpeth
ASP	-	Aluminum steel polyethylene
PVC	-	Polyvinylchloride

2. Other signs:

X	-	Actual pairs
+	-	Plus, additional pairs
IN/OUT	-	Indicates pairs terminated in and directly cross-connected out

3. Wideband cable is no longer manufactured; however, existing cable exists at KSC. Three pairs, 19 gauge in the wideband cable are no longer listed, since they are unterminated at all locations.

Figure 1. Typical Cable Designations

Main feeder cables originating from a given primary MDF or WBT shall be sequentially numbered in the chronological order of placement. Main feeder cables interconnecting two primary MDF's or WBT's shall be numbered from the lowest numbered MDF or WBT.

3.1.2.1.2 Distribution Cables. - One of the following methods shall apply, as applicable.

3.1.2.1.2.1 Distribution Cable Spliced Directly to Feeder Cable. - A distribution cable (buried, underground, or building) that is spliced directly to its feeder cable shall be numbered the same as the feeder cable. (See figure 2.)

3.1.2.1.2.2 Distribution Cable Connected to Feeder Cable Through a Cross-Connecting Terminal. - A distribution cable connected to its feeder cable through a cross-connecting terminal shall retain the number of the feeder cable with the suffix 01, 02, 03, etc., as appropriate. The numerical sequence of the suffixes of different distribution cables connected to the same feeder cable will be dependent upon the order of placement of the distribution cables. The first distribution cable connected to a feeder cable numbered 01 through a cross-connected terminal shall be numbered 0101, as shown in figures 2 and 3. The pair count in the cross-connected distribution cable will begin with pair number 1, regardless of the pair count in the feeder cable.

3.1.2.1.2.3 Distribution Cable Connected to Feeder Cable Through a Straight-Connecting Protected Terminal. - A distribution cable connected to its feeder cable through a straight-connecting protected terminal shall be numbered as detailed in 3.1.2.1.2.2, but its pair count shall be the same as the pair count of the feeder cable, as shown in figure 4.

3.1.2.1.2.4 Distribution Cable Connected to a Main Feeder Through More Than One Cross-Connecting Terminal. - A distribution cable connected to a main feeder cable through more than one cross-connecting terminal shall retain the number of the feeder cable, affixed with a two-digit suffix for each cross-connection, as illustrated in figures 2 and 5.

3.1.2.1.3 Tie Cables. - A tie cable installed between two subsidiary MDF's that are each fed by separate feeder cables shall be numbered as a distribution cable from the MDF bearing the lowest number. (See figures 6 and 7.)

3.1.2.1.4 Building Cables. - Building distribution cables connected to a building feeder cable through an MDF or cross-connecting terminal shall be numbered as detailed in 3.1.2.1.2.2. When an MDF or cross-connecting terminal within a

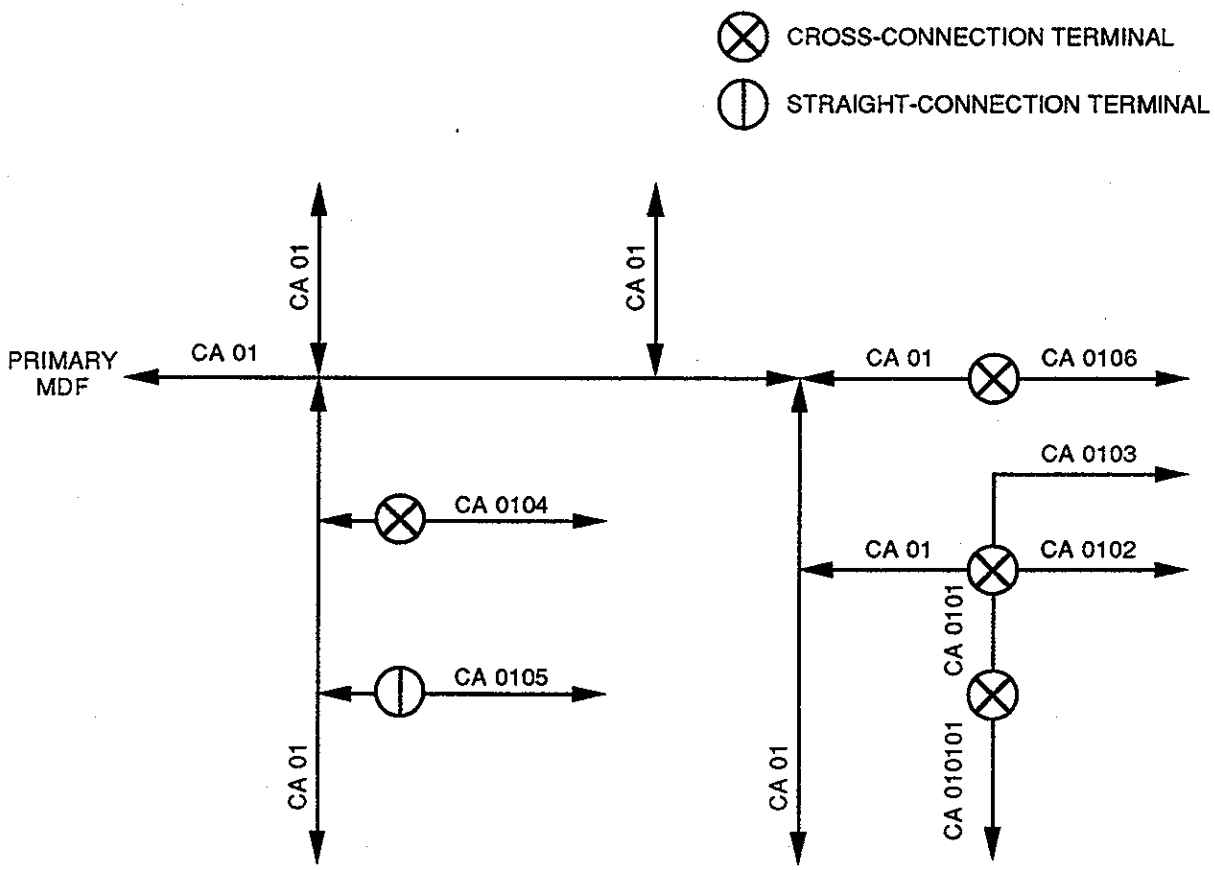

M2/MDP/KSC-STD-E-0009/FIGURE 2

Figure 2. General Cable Numbering Scheme

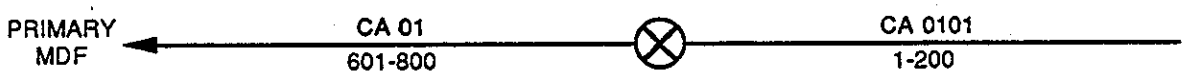

Figure 3. Cable Number and Pair Count When Using Cross-Connect Terminal

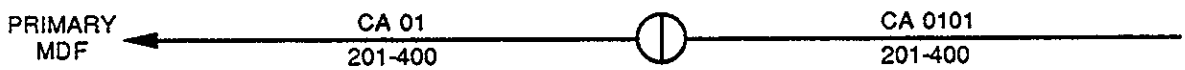

Figure 4. Cable Number and Pair Count When Using Straight-Connect Terminal

M2/MDP/KSC-STD-E-0009/FIGURES 3, 4

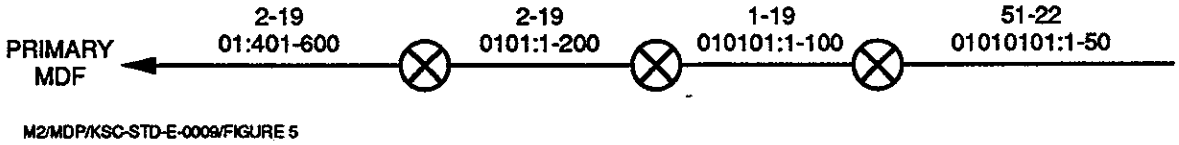

Figure 5. Cable Numbering Scheme, Cross-Connect Terminals in Series

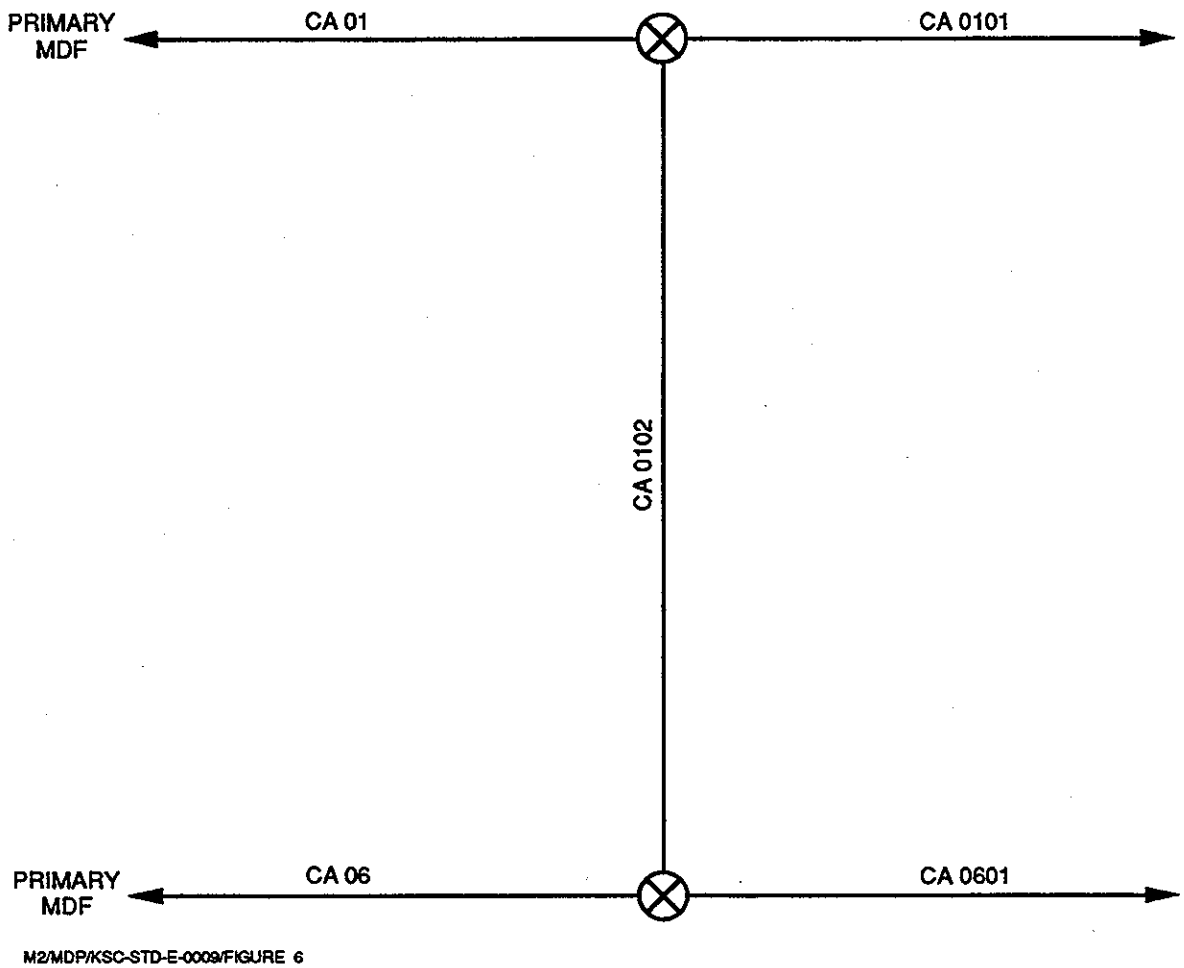

Figure 6. Numbering Tie Cables Between Subsidiary MDF's Fed by Separate Feeder Cables

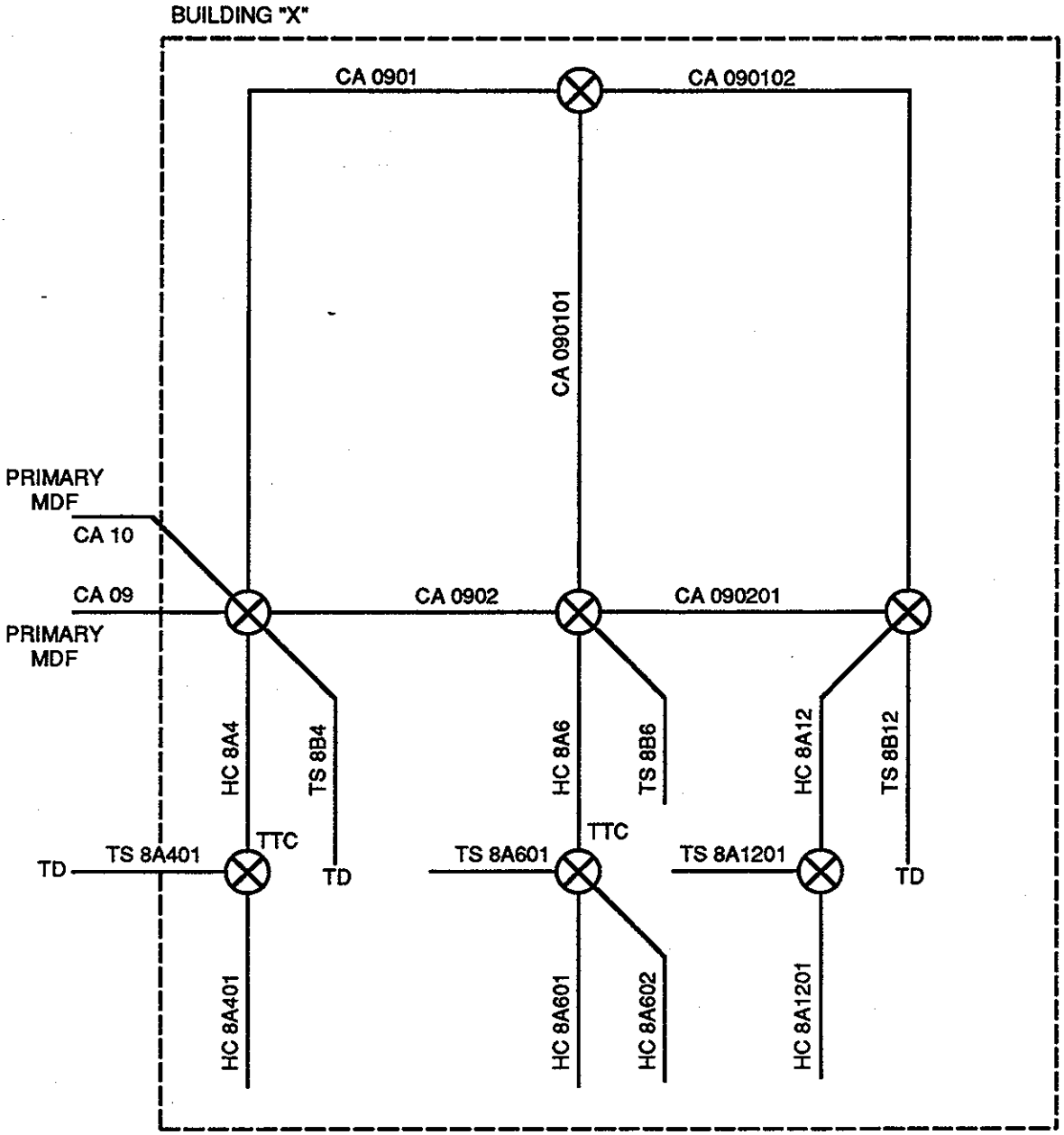

Figure 7. Numbering Cables in a Building Where One or More Distributing Points are Used

M2/MDP/KSC-STD-E-0009/FIGURES 7

building is fed by two or more feeder cables bearing separate cable numbers, the building distribution cables cross-connected therefrom shall retain the number of the lowest numbered feeder cable serving the building. (See figures 7 and 8.)

3.1.2.1.4.1 House Cables. - House cables (HC's) are considered to be those miscellaneous (normally small in size) administrative cables originating on the horizontal side of a distributing frame generally serving the immediate communications center area. For quick identification and elimination of cable designator duplication, house cable numbers correspond to the physical termination location of the cable on the horizontal. For example, A 50-pair cable terminated on vertical 6 (horizontal side), shelf A of distributing frame number 12, suffixed with HC, shall be designated as HC 6A12 (figures 7 and 9). Only one alphabetical letter will appear in the house cable designator. Should the cable termination span more than one frame shelf level, only the letter designating the shelf level where the cable starts its termination shall appear in the cable designator.

3.1.2.1.4.2 Technical Systems Cables - Technical systems (TS) cables are those cables installed to interface between the outside plant portion of the fixed wire communications system and technical activities, or connecting to the other cable systems designed to support technical systems that are not part of the outside cable plant. Technical systems cables originating on the horizontal side of a distribution frame shall be numbered in the same manner as for house cables, using the prefix TS, as shown in figures, 7, 8, and 10. Technical systems cables originating at telephone terminal cabinets (TTC's) shall be numbered the same as building distribution cables; that is, they shall have the number of the cable feeding the TTC, with the proper suffix (01, 02, etc.) and the prefix TS.

3.1.2.1.4.3 Multipled House or Technical Systems Cables. - When two or more house cables and/or technical systems cables are multipled on a line terminal block on the horizontal side of an MDF, the cables shall be designated as detailed in 3.1.2.1.4.1, except that each cable in the multipled group shall be assigned a number suffix beginning with number 01. An example is illustrated in figure 11.

3.1.2.2 Numbering Audio Cable Distribution Frames. - Audio cable distribution frames shall be assigned numbers from 1 to 155. Blocks of numbers for designating MDF's have been allocated to geographical areas in the following manner:

Area	Number Allocated
KSC Industrial Area	1-49
LC-39	50-155

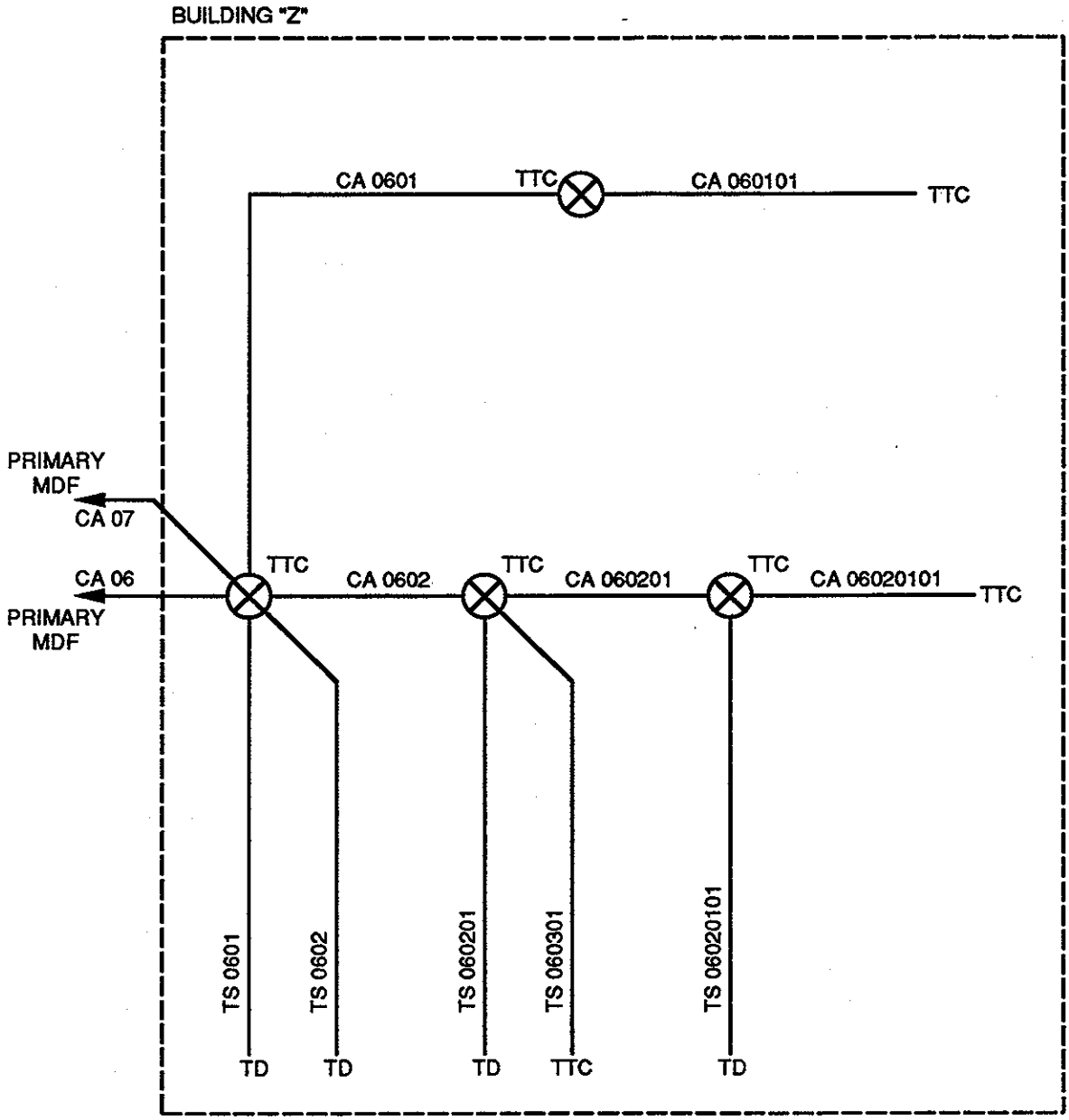

Figure 8. Numbering Cables in a Building Where One or More Cross-Connect Terminals Are Used

M2/MDP/KSC-STD-E-0009/FIGURES 8

A. HOUSE CABLES

	HC	-	House cable
HC 6A12	6	-	MDF vertical number location
	A	-	Shelf level termination begins on horizonal side
	12	-	MDF number

B. TECHNICAL CIRCUITS

	TS	-	Technical system cable
TS 12C60	12	-	MDF vertical number location
	C	-	Shelf level termination begins on horizontal side
	60	-	MDF number

Figure 9. House or Technical System Cable Originating on Horizontal Side of Main Frame

A. TYPICAL TELEPHONE CABLE DESIGNATOR

	T	-	Telephone IDF
T 4A92A	4A	-	Vertical and shelf location
	92A	-	MDF number listed and floor level

B. TYPICAL DATA DESIGNATOR

	DS	-	Low-speed data to rack
DS 3E92B	3E	-	Vertical and shelf location
	92B	-	MDF number listed and floor level

C. TYPICAL CUSTOMER CABLE DESIGNATOR

	CFP	-	Customer face plate
CFP 01-378	01	-	Floor level
	378	-	User number

NOTES:

1. Frames and utilized letters:

MDF	-	Main distribution frame	T	-	Telephone
IDF	-	Intermediate distribution frame	D	-	Data serving CFP's
DDF	-	Data distribution frame	DS	-	Data serving racks
HSDF	-	High-speed data frame	HS	-	High-speed data
CFP	-	Customer face plate			

2. Use alphanumeric numbering to indicate floor levels.

Figure 10. Typical Premise Wiring Distribution

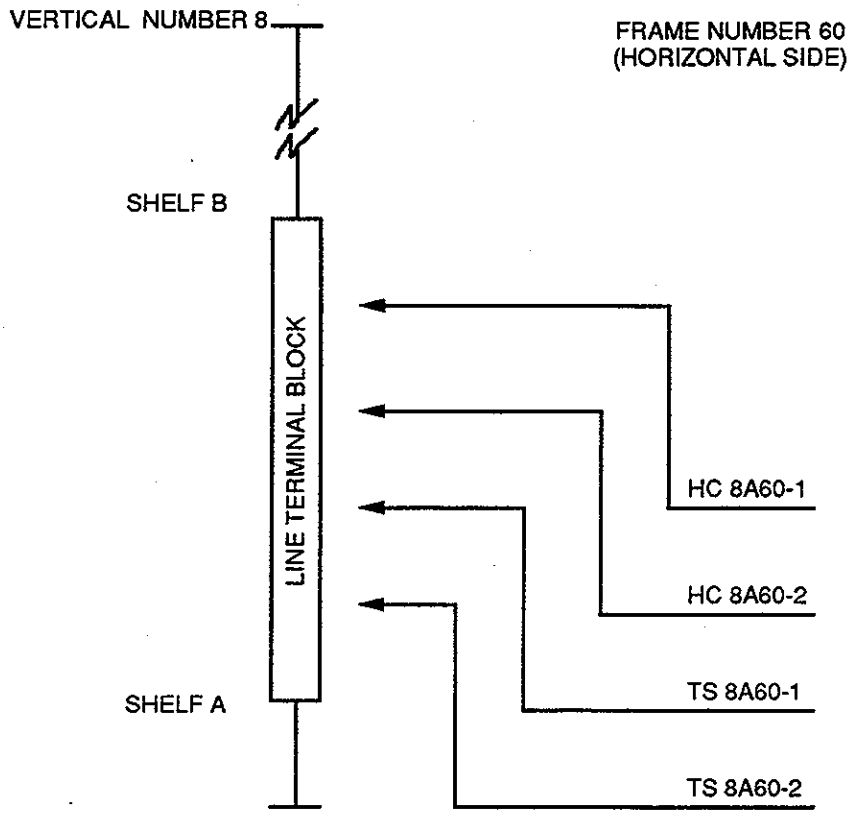

Figure 11. Method for Designating House Cables and Technical Service Cables When More Than One Cable is Terminated on a Line Terminal Block

M2/MDP/KSC-STD-E-0009/FIGURE 11

Existing MDF number assignments are shown in figures 12 and 13. New MDF's shall be sequentially numbered in the chronological order of placement.

3.1.2.3 Numbering Wideband Terminals. - Due to the variation in size and configuration of wideband cable terminations, the terminations are referred to generally as wideband terminals. Wideband terminals are numbered from 1 to 99. Blocks of numbers for designating WBT's have been allocated to geographical areas in the following manner:

Area	Number Allocated
KSC Industrial Area	1-49
LC-39	50-99

Existing WBT number assignments are shown in figures 14 and 15. New WBT's shall be sequentially numbered in the chronological order of placement.

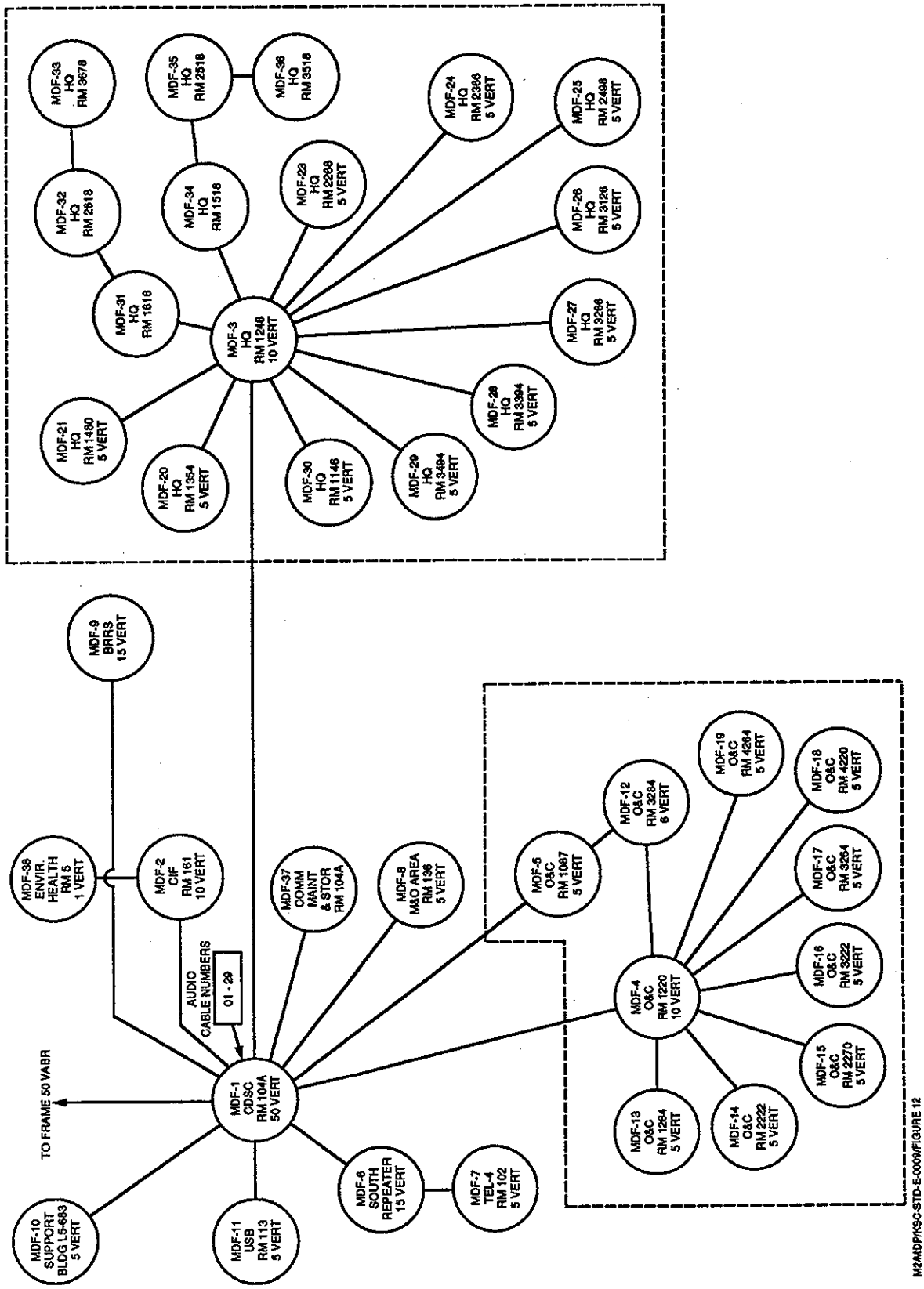

Figure 12. Audio Cable Distributing Frames, KSC Industrial Area

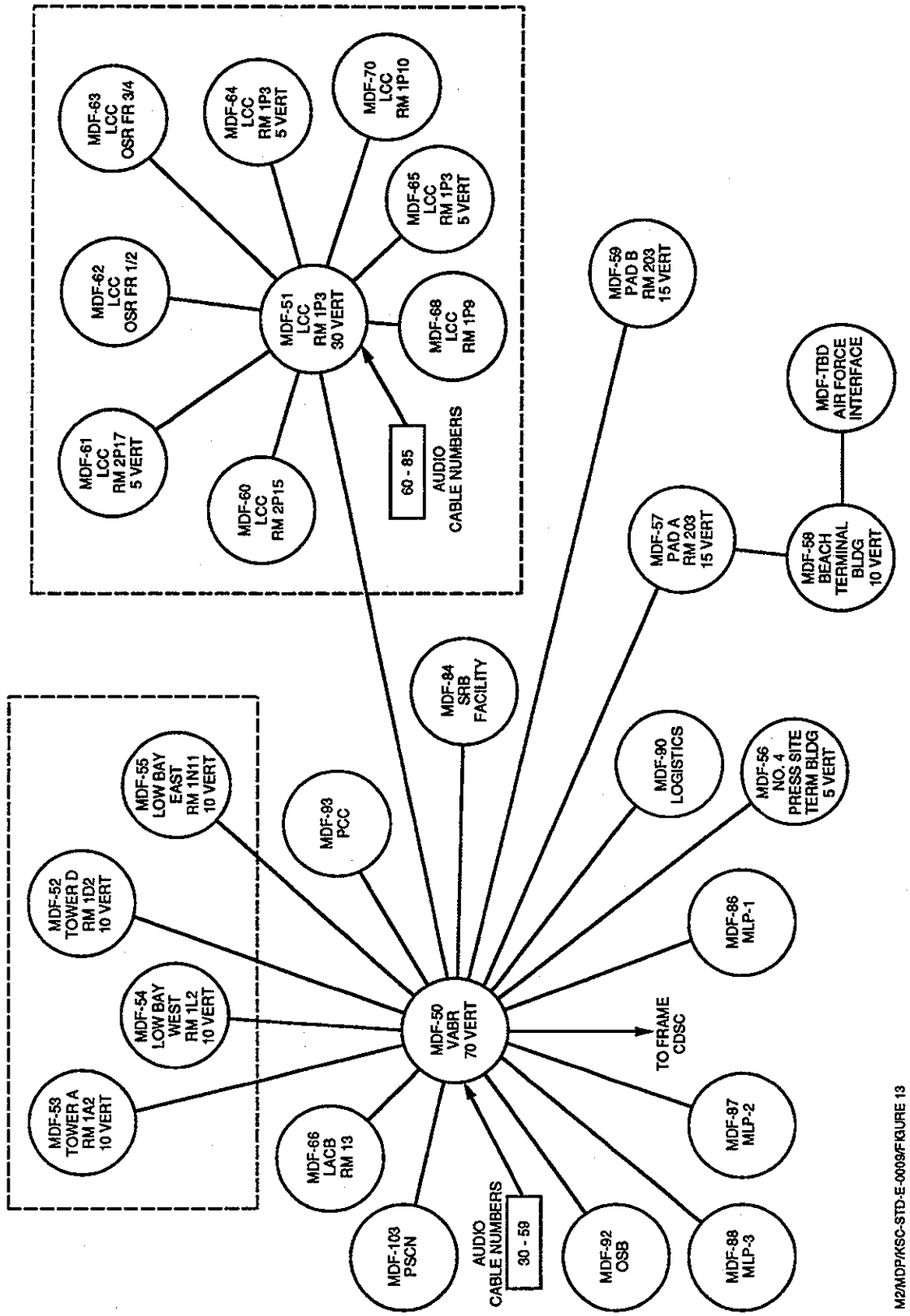

Figure 13. Audio Cable Distributing Frames, Launch Complex 39

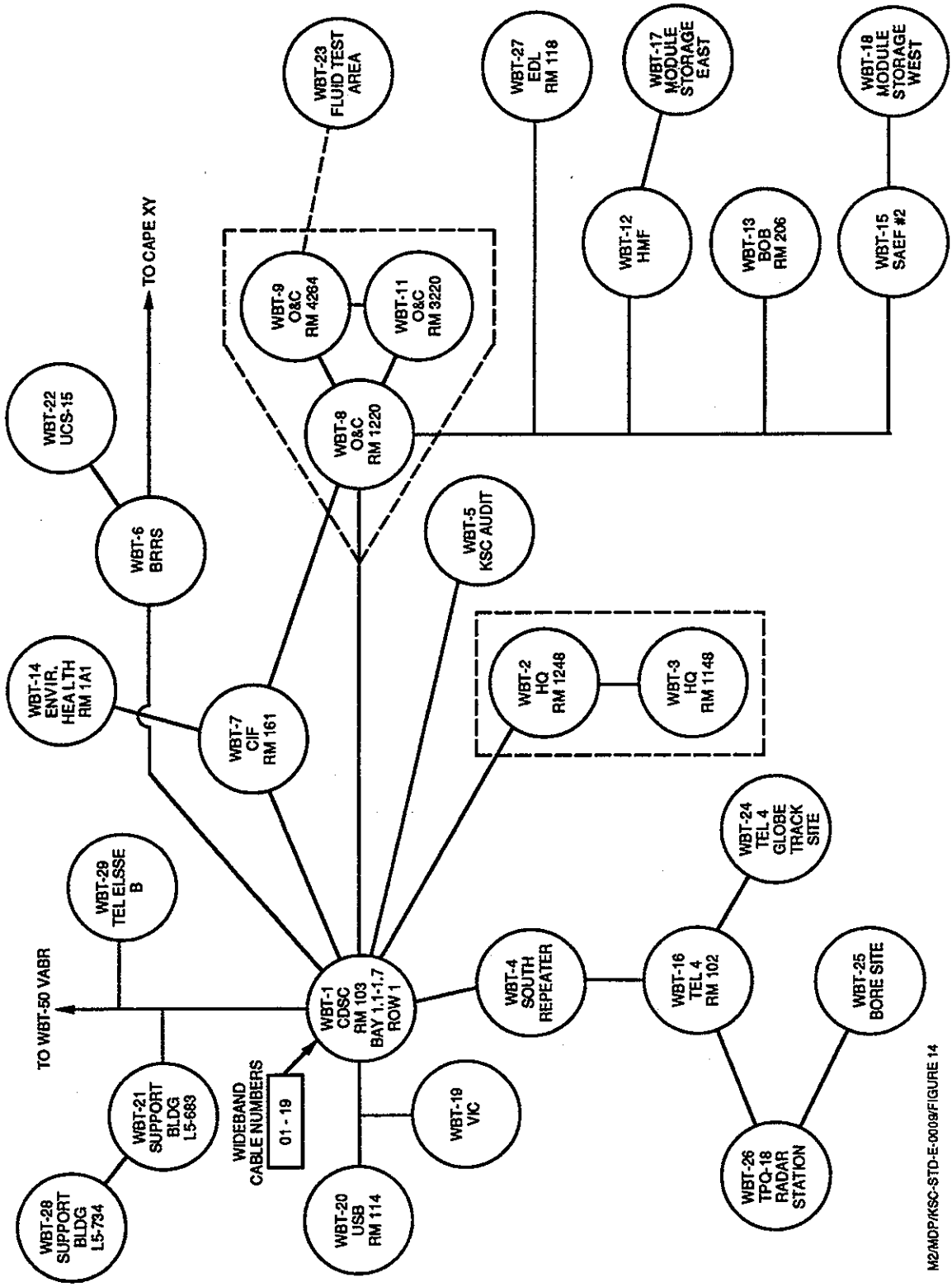

Figure 14. Wideband Number Assignments, KSC Industrial Area

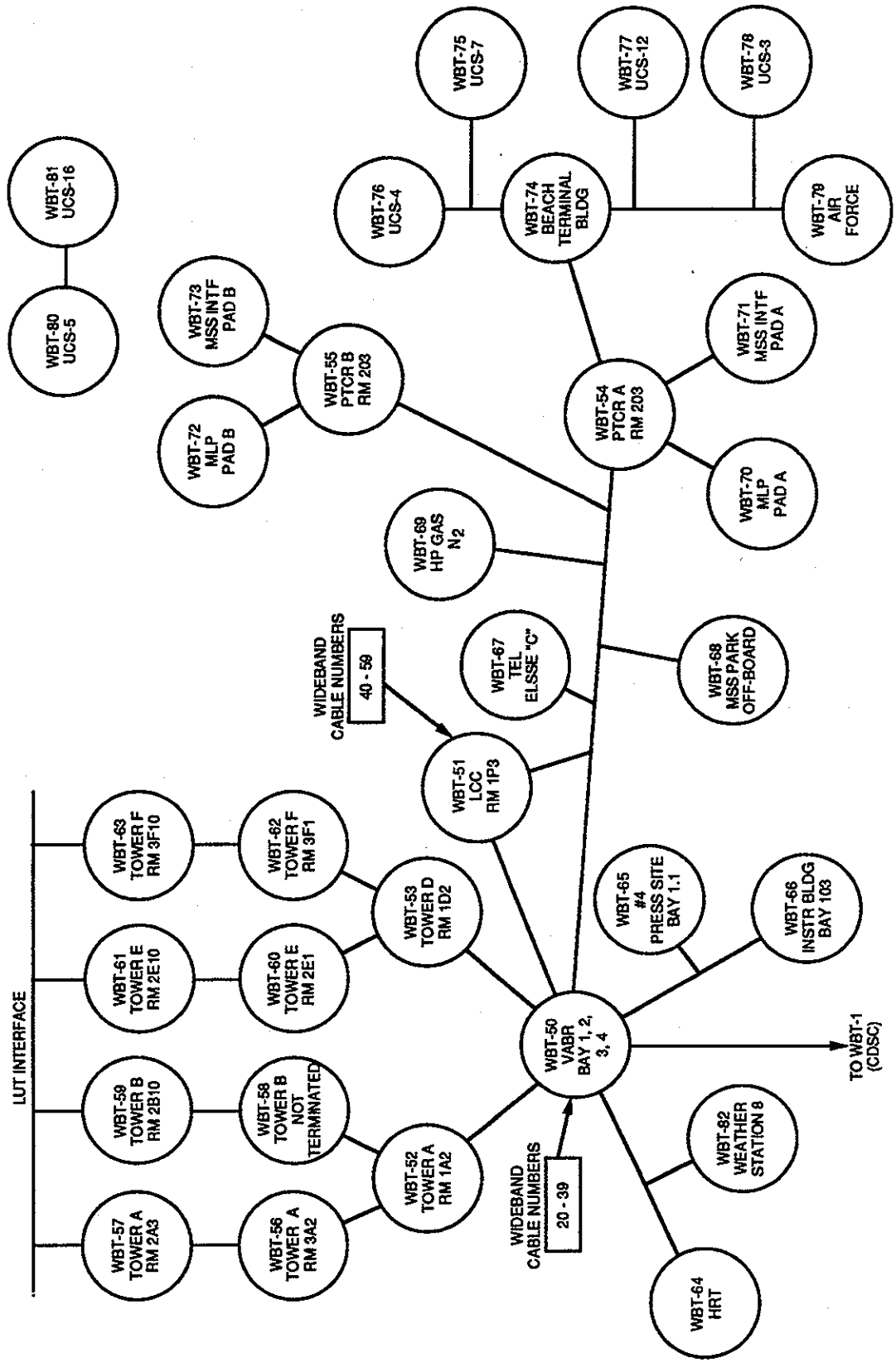

Figure 15. Wideband Terminal Number Assignments, LC-39

3.2 Requirements for Fiber Cable.

Cable Identification (By Cable Manufacturer). - Fiber Cable is identified by a cable identification symbol that is constructed per the following:

a. The first three lines on the identification symbol use the seven characters as described by the following:

(1) The first, second, and third characters (from left to right) denote the number of active optical fibers in the cable.

(2) The fourth character shall be a slash (/).

(3) The fifth, sixth, and seventh characters denote optical transmission windows that the optical fibers can support (the single-mode window is not indicated). These windows are defined herein as follows:

(a) The fifth character shall be an "A" or an "O". The "A" denotes a window at a wavelength of 850 nanometers (nm) with an attenuation of 4 decibels per kilometer (dB/km) and a bandwidth of 800 megahertz per kilometer (MHz/km). The character shall be an "O" if these requirements are not met.

(b) The sixth character shall be a "B" or an "O". The "B" denotes a multimode window at a wavelength of 1300 nm with an attenuation of 1 dB/km and a bandwidth of 1 gigahertz per kilometer (GHz/km), or a single-mode window with an attenuation of 0.5 dB/km. The character shall be an "O" if these requirements are not met.

(c) The seventh character shall be a "C" or an "O". The "C" denotes a multimode or single-mode window of a wavelength of 1550 nm with an attenuation of 0.5 dB/km. The character shall be an "O" if these requirements are not met.

b. The two lower lines of the cable identification symbol indicate multimode (FM) or single-mode (FS) fibers, cable number, and fiber count.

Examples:

072/OBC: Number of optical fibers and transmission window.

FM50:141-200: Identifies 60 multimode fibers.

FS50: 25-36: Identifies 12 single-mode fibers.

4. QUALITY ASSURANCE PROVISIONS

Not applicable.

5. PREPARATION FOR DELIVERY

Not applicable.

6. NOTES

6.1 Intended Use. - This standard is intended for use by all KSC organizations involved in engineering design work requiring numbering of outside plant cables.

6.2 Definitions. - For the purpose of this standard, the following definitions shall apply.

a. Distribution Cable: With reference to a branch splice or terminal, a distribution cable is a cable that connects the branch splice or terminal to the end user, either directly or through cross-connected cable sections.

b. Feeder Cable: With reference to a branch splice or terminal, a feeder cable is a cable that connects the branch splice or terminal to a primary MDF, either directly or through cross-connected cable sections.

c. Fiber-Optic Cable: A cable constructed per the requirements of the fiber-optic cable specification 79K28125. This cable consists of multimode fibers, single-mode fibers, or some composite mix of both types of fibers.

d. Fiber-Optic Terminal (FOT): A fiber cabinet or terminal where fibers are connectorized in patch panels and is designated by a number that directly correlates to the MDF number in the same facility. Where no MDF exists, the number of the FOT toward the cable feed is used with an alpha suffix added. (e.g., FOT50A)

e. Multimode Fibers: Graded index optical glass with a core diameter of 50 ±3 micrometers (µm), typical. (See KSC Specification 79K28125.)

f. Primary MDF: Primary MDF's are key audio cable distributing points from which main audio feeder cables originate. The MDF's in the Communications Distribution and Switching Center (CD&SC), the VAB Repeater Building (VABR), and the LC-39 Launch Control Center (LCC)

have been designated primary MDF's. Each Primary MDF has been assigned a block of two-digit numbers for designating main audio feeder cables originating therefrom.

g. Primary WBT: Primary WBT's are key wideband cable distributing points from which main wideband feeder cables originate. The WBT's in the CD&SC, the VABR, and the LC-39 LCC have been designated primary WBT's. Each primary WBT has been assigned a block of two-digit numbers for designating main wideband feeder cables originating therefrom.

h. Single-Mode Fibers: Step index optical glass with a core diameter of 8.7 µm, typical. (See KSC Specification 79K28125.)

i. Subsidiary MDF: Subsidiary MDF's include all audio cable distributing frames on the distribution side of the primary MDF's. Subsidiary MDF's are fed from primary MDF's either directly or through cross-connected cable sections.

j. Subsidiary WBT: Subsidiary WBT's include all wideband cable distributing points on the distribution side of the primary WBT's. Subsidiary WBT's are fed from primary WBT's, either directly or through cross-connected cable sections.

NOTICE: The Government drawings, specifications, and/or data are prepared for the official use by, or on the behalf of, the United States Government. The Government neither warrants these Government drawings, specifications, or other data, nor assumes any responsibility or obligation, for their use for purposes other than the Government project for which they were prepared and/or provided by the Government, or an activity directly related thereto. The fact that the Government may have formulated, furnished, or in any way supplied the said drawings, specifications, or other data is not to be regarded, by implication or otherwise, as licensing in any manner the holder or any other person or corporation, nor conveying the right or permission, to manufacture, use, or sell any patented invention that may relate thereto.

Custodian:

NASA - John F. Kennedy Space Center

Preparing Activity:

John F. Kennedy Space Center
Facilities Engineering Division
Engineering Development Directorate