METRIC/INCH POUND

KSC-STD-132C
June 12, 1997

POTTING AND MOLDING ELECTRICAL CABLE ASSEMBLY TERMINATIONS, STANDARD FOR

National Aeronautics and
Space Administration

John F. Kennedy Space Center

KSC FORM 16-12 (REV. 6/95) PREVIOUS EDITIONS ARE OBSOLETE

KSC-STD-132C
June 12, 1997

POTTING AND MOLDING ELECTRICAL CABLE ASSEMBLY TERMINATIONS, STANDARD FOR

APPROVED:

Sterling W. Walker
Director of Engineering Development

JOHN F. KENNEDY SPACE CENTER, NASA

P2/MSWORD/STAN/KSC_132C.DOC

TABLE OF CONTENTS

Section	Title	Page
1.	SCOPE	1
2.	APPLICABLE DOCUMENTS	1
2.1	Governmental Specifications	1
2.2	Governmental Standards	2
2.3	Governmental Drawings	3
2.4	Order of Preference	3
3.	DEFINITIONS	3
4.	GENERAL REQUIREMENTS	4
4.1	Materials	4
4.1.1	Epoxy	5
4.1.2	Elastomeric	5
4.1.3	Storage Life of Materials	6
4.1.3.1	Compounds and Activators	6
4.1.3.2	Primers	6
4.1.3.3	Containers	6
4.2	Configuration and Dimensions	7
4.3	Equipment	7
4.3.1	Vacuum Chamber1	7
4.3.2	Mixing Containers	7
4.3.3	Air-Pressurization Equipment	7
4.3.4	Brushes	7
4.3.5	Weighing Equipment	7
4.3.6	Holding Rack	7
4.3.7	Injection Gun	7
4.3.8	Cable Molds	8
4.3.9	Thermometer	8
4.3.10	Abrasive Paper	8
4.3.11	Metal Spatula	8
4.3.12	Hot Plate	8
4.3.13	Curing Apparatus	8

TABLE OF CONTENTS (cont)

Section	Title	Page
5.	DETAILED REQUIREMENTS	8
5.1	Facilities	8
5.1.1	Molding and Potting Area	8
5.1.2	Ventilation	9
5.1.3	Environmental Conditions	9
5.1.4	Cleanliness	9
5.1.5	Health and Safety Precautions	9
5.1.6	Inspection	10
5.1.7	Personnel	11
5.2	Preparation for Potting and Molding	11
5.2.1	Preparation of Cable Assemblies	11
5.2.1.1	Adhesion	11
5.2.1.1.1	Pretest	11
5.2.1.1.2	Cleaning	12
5.2.1.2	Potting or Molding Over Epoxy	12
5.2.2	Preparation of Connectors	12
5.2.2.1	Protection Caps	12
5.2.2.2	Mating Connectors	12
5.2.2.3	Abrade	12
5.2.2.4	Priming	13
5.2.2.5	Assembly	13
5.2.3	Preparation of Cable	15
5.2.3.1	Primer	15
5.2.3.2	Wicking	15
5.2.3.3	Preparation of Neoprene Sheath	15
5.2.3.4	Preparation of PVC Sheath	16
5.2.3.5	Preparation of Polyethylene Sheath	16
5.2.4	Potting Setup	17
5.2.5	Mold Preparation	18
5.2.6	Molding Setup	18
5.3	Preparation of Compounds	19
5.3.1	Epoxy Potting Compounds	19
5.3.2	Preparation of Elastomeric Compounds	20
5.3.2.1	Liquid	20
5.3.2.2	Thawing of Premixed, Frozen Cartridges	21

TABLE OF CONTENTS (cont)

Section	Title	Page
5.4	Potting Instructions	22
5.4.1	Inspection	22
5.4.2	Injection	22
5.4.3	Curing	23
5.4.4	Inspection	23
5.4.4.1	Connectors	23
5.4.4.2	Potting	23
5.4.5	Repair	24
5.5	Molding Instructions	24
5.5.1	Inspection	24
5.5.2	Injection	24
5.5.3	Curing	25
5.5.3.1	Curing Schedule	25
5.5.3.2	Molded Assembly	25
5.5.4	Inspection	25
5.5.4.1	Inspection Test	25
5.5.4.2	Transparency	26
5.5.4.3	Adhesion	26
5.5.4.4	Connectors	26
5.6	Repair and Rework	26
5.6.1	Repairable Defects	26
5.6.2	Rework Procedure	27
5.6.2.1	Minor Cavity	27
5.6.2.2	Major Cavities	27
5.6.3	Inspection	28
5.7	Reports	28
6.	NOTES	28
6.1	Intended Use	28
APPENDIX A	ILLUSTRATIONS	A-1
APPENDIX B	VENDOR INDEX	B-1

ABBREVIATIONS AND ACRONYMS

APPROX	approximately
°C	degree Celsius
°F	degree Fahrenheit
CL	centerline
conn	connector
dim	dimension
FSCM	Federal supply code for manufacturers
KSC	John F. Kennedy Space Center
MAX	maximum
MEK	methyl-ethyl-ketone
MIL	military
MIN	minimum
mm	millimeter
MSFC	George C. Marshall Space Flight Center
MTG	mounting
NASA	National Aeronautics and Space Administration
no.	number
psi	pound per square inch
PVC	polyvinyl chloride
R	radius
RECP	receptacle
REF	reference
REQD	required
RFI	radio frequency interference
SPEC	specification
STD	standard
TYP	typical

POTTING AND MOLDING ELECTRICAL CABLE ASSEMBLY TERMINATIONS, STANDARD FOR

1. SCOPE

The purpose of this document is to establish a standard process for potting and molding electrical cable assembly terminations using epoxy-resin potting compositions and elastomeric dielectric compounds.

This standard describes the materials and methods to be used in potting and molding electrical cable assembly terminations with epoxy-resin potting compositions and elastomeric dielectric compounds and describes the facilities and equipment required to perform the potting and molding processes. The standard dimensional requirements for potting and molding specific types of cable assemblies are specified in appendix A.

2. APPLICABLE DOCUMENTS

The following documents form a part of this document to the extent specified herein. When this document is used for procurement, including solicitations, or is added to an existing contract, the specific revision levels, amendments, and approval dates of said documents shall be specified in an attachment to the Solicitation/Statement of Work/Contract.

2.1 Governmental Specifications.

John F. Kennedy Space Center (KSC), NASA

KSC-E-165	Electrical Ground-Support Equipment Fabrication, Specification for
KSC-SPEC-E-0029	Compounds, Potting and Molding, Elastomeric, Specification for

George C. Marshall Space Flight Center (MSFC), NASA

MSFC-SPEC-222	Resin Compounds, Electrical and Environmental

Federal

0-T-634	Trichloroethylene, Technical
TT-E-529	Enamel, Alkyd, Semi-Gloss
TT-M-261	Methyl-Ethyl-Ketone (for Use in Organic Coatings)

Military

MIL-C-5015	Connectors, Electrical, Circular Threaded, General Specification for
MIL-C-22992	Connector, Plugs and Receptacles, Electrical, Waterproof, Quick Disconnect, Heavy Duty Type, General Specification for
MIL-I-23053	Insulation Sleeving, Electrical, Heat Shrink
MIL-C-26482	Connector, Electrical (Circular, Miniature, Quick Disconnect, Environment, Resisting) Receptacle and Plugs, General Specification for
MIL-C-38999	Connector, Electrical, Circular, Miniature, High Density, Quick Disconnect, Environmental, Resistant, Removable Crimp Contacts, Backshell, Without Strain Relief, Specification for

2.2 Governmental Standards.

Military

MIL-STD-171	Finishing of Meal and Wood Surfaces

2.3 Governmental Drawings.

John F. Kennedy Space Center (KSC), NASA

79K14177	Instructions for Potting and Molding Connector Assemblies

George C. Marshall Space Flight Center (MSFC), NASA

40M38277	Connector, Electrical, Circular, Miniature High Density, Environment Resisting, Specification for
40M38298	Connector, Electrical, Miniature High Density, Circular, Environment Resisting, 200 °C, Specification for
40M39569	Connector, Electrical, Special, Miniature High Density, Circular, Environment Resister, 200 °C, Specification for
75M13302	Connector, Inspection, Specification for

(Copies of specifications, standards, drawings, and publications required by contractors in connection with the application of this procedure should be obtained from the procuring activity or as directed by the Contracting Officer.)

2.4 Order of Preference. - In the event of conflict between the documents referenced herein and the contents of this document, the contents of this document shall supersede except where otherwise noted. The applicable NASA contract or purchase/procurement order shall take precedence over the contents of this document in the event of conflicting requirements. Nothing in this document supersedes applicable laws and regulations unless a specific exemption has been obtained. The Contracting Officer or other authorized Government official, shall be notified of any such conflict in documentation.

3. DEFINITIONS

For the purpose of this standard, the following definitions shall apply.

a. Abrade. To remove glass or roughen surface using sandpaper.

b. Elastomeric. Adjective for a rubberlike synthetic polymer, such as silicone rubber.

c. Epoxy. A durable, corrosion-resistant resin used in coatings.

d. Mix. To completely blend two or more materials or compounds into one uniform, homogenous mass.

e. Molding. A process for creating a physical form to protect a cable termination from hazards in the operating environment, as well as to provide strain relief.

f. Neoprene. A synthetic rubber produced by the polymerization of chloroprene; it is highly resistant to oil, heat, light, and oxidation.

g. PVC. Any of a family of polymers derived from vinyl chloride: they have many uses in various forms, as in rigid plastic pipes and filmy food wrappers.

h. Polyethylene. Any of several thermoplastic resins made by the polymerization of ethylene: used in making translucent, lightweight, and tough plastics, fibers, etc.

i. Potting. A process for creating a physical form to protect a cable connector from hazards in the operating environment and to help insulate bare wire terminations in the connector from each another.

j. Primer: Precoating material to facilitate adhesion of final coat.

k. Sheath. A protective cable jacket.

l. Wicking. Action of drawing a liquid or molten material through capillary action.

4. GENERAL REQUIREMENTS

4.1 Materials. - The following materials, substitutions, or deviations, as approved by the cognizant design activity, shall be used.

NOTE

Where shrinkable boots are used, all solder-type or exposed connections shall be potted with epoxy, but crimp connections protected by grommets shall not be potted. Where molding with polyurethane, crimp connections protected by grommets shall not be prepotted with epoxy; and on solder or exposed connections, the prepotting may be omitted if contact dimensions and alignment conforming to 75M13302 can be maintained during molding.

4.1.1 Epoxy.

a. Mold Release. The following, or approved equal, mold-release compounds shall be used:

Material	Source
225 Mold Release	Lilly Industries, Inc.
MS-122 Fluorocarbon	Miller Stephensen Chemical Company
Krytox AR	E. I. DuPont DeNemours and Company

b. Potting Materials. Potting compounds shall conform to the requirements of MSFC-SPEC-222, type II.

c. Primers. Primers shall be of the type recommended by the manufacturer of the material.

d. Solvent Cleaners. Solvents used for cleaning purposes shall conform to the requirements of TT-M-261 and 0-T-634, as applicable.

4.1.2 Elastomeric.

a. Methyl-Ethyl-Ketone (MEK). The MEK solvent cleaner shall conform to TT-M-261.

b. Molding and Potting Compounds. Molding and potting compounds conforming to KSC-SPEC-E-0029, type III (supplied as either two-part

units or as a premixed, degassed compound frozen in cartridges), shall be used.

c. Mold Release. The following, or approved equal, mold-release compounds shall be used:

Material	Source
225 Mold Release	Ram Chemical Company

d. Primers. Primers, when required, shall be as specified in KSC-SPEC-E-0029 or 79K14177.

e. Sealant. When required, the following repair and sealant material, or an approved equivalent, shall be used:

Material	Source
Pro-Seal 766	Coast Pro-Seal and Manufacturing Corp., Essex Chemical Corp.

4.1.3 Storage Life of Materials.

4.1.3.1 Compounds and Activators. - Storage life of compounds in original unopened containers and frozen cartridges, when applicable, shall conform to KSC-SPEC-E-0029 (elastomeric) or MSFC-SPEC-222 (epoxy).

4.1.3.2 Primers. - The storage life of primers may vary because of composition and shall be in accordance with the individual manufacturer's recommendations.

4.1.3.3 Containers. - All containers shall be labeled as to contents, before and after mixing, and shall show the shelf life expiration date.

NOTE

Expiration date of materials may be extended for 6 months when they have been stored in a reasonably controlled atmosphere. Before qualifying for use, however, a button must be processed from the batch and tested for transparency and Shore A hardness according to 5.4.4.2 or repeat the criteria from 5.4.4.2. The batch is qualified for immediate use if it passes this test.

4.2 Configuration and Dimensions. - Unless otherwise specified in engineering drawings, recommended configurations and dimensions shall be in accordance with the illustrations of appendix A.

4.3 Equipment. - The following equipment, substitutions, or deviations, as approved by the cognizant design activity, shall be used.

4.3.1 Vacuum Chamber. - An evacuation system consisting of a pump and a vacuum chamber capable of evacuation to a maximum absolute pressure of 3.4 kilopascals (kPa) [0.5 pound per square inch (psi)] shall be used to minimize entrapment of air in the molding and potting materials.

NOTE

> It is recommended that an integral mixer be used with the vacuum chamber to accommodate materials with a short pot life.

4.3.2 Mixing Containers. - Mixing containers shall be of a nonporous material such as metal, glass, or plastic.

4.3.3 Air-Pressurization Equipment. - Air-pressurization equipment shall be capable of delivering filtered air having a maximum relative humidity of 5 percent at a minimum gage pressure of 34.5 kPa (5 psi), and maximum gage pressure of 620 kPa (90 psi), with sufficient capacity and pressure control to permit operation anywhere within this range.

4.3.4 Brushes. - Brushes shall have nonmetallic bristles. All brushes (new and used) must be cleaned to remove all dirt and grease from the bristle and stored in a clean container until used.

4.3.5 Weighing Equipment. - Weighing equipment shall include a gram balance and a pound balance. The gram balance shall have a 250-gram weighing capacity and shall be accurate to 1.0 gram. The pound balance shall have a 30-pound weighing capacity and shall be accurate to 0.1 pound.

4.3.6 Holding Rack. - A holding rack having a laboratory-type "flexa-frame," or similar parts fitted with holding clamps, shall be constructed to hold the cable components rigid and in proper alignment.

4.3.7 Injection Gun. A manual-, semiautomatic-, or automatic-powered injection gun, Courtaulds Aerospace Application Support Center, or approved equal, shall be

used for injecting the potting compound into the connectors. When using potting compounds specified in this standard, disposable polyethylene nozzles, plungers, and liners are required for the injection gun. The gun capacity and nozzle size shall depend on the quality and type of connectors being potted or molded. Extra care shall be taken to provide the air gun with adequate isolation between the pressurized air and compound to avoid aeration of the mixture.

4.3.8 Cable Molds. - Cable molds shall be easy to assemble, impervious to temperature change, strong and solid in construction, and easy to remove after the molding material has set.

4.3.9 Thermometer. - The thermometer shall be an immersion type, Eveready Thermometer Company catalog no. 110C230F [0 to 230 degrees Fahrenheit (°F)], [-18 to 212 degrees Celsius (°C)], or an approved equal.

4.3.10 Abrasive Paper. - The abrasive paper shall be Minnesota Mining and Manufacturing Company Tri-m-mite sanding sheets, no. 60 grit, or an approved equal.

4.3.11 Metal Spatula. - The spatula shall be Sargent-Welch Scientific series S-75245, Curtin Matheson Scientific series 208-496, or an approved equal.

4.3.12 Hot Plate. - The hot plate shall be Sargent-Welch Scientific model S-41075, Curtin Matheson Scientific catalog no. 137-174, or an approved equal.

4.3.13 Curing Apparatus. - The molding and potting facility shall be equipped with an approved curing apparatus. The curing apparatus may be an air-circulating oven, infrared equipment, heater strips, or rods. The curing apparatus shall be capable of maintaining a curing temperature within plus or minus 10 °C (plus or minus 18 °F) and shall provide a means of preventing hot spots during the curing process.

5. DETAILED REQUIREMENTS

5.1 FACILITIES

5.1.1 Molding and Potting Area. - The dimensions of an acceptable molding and potting area shall be governed by the volume of workload. The area shall be of sufficient size to permit proper processing of cables. The area shall contain sufficient equipment and supplies to prevent the need for an overlap of operations.

5.1.2 Ventilating. - The molding and potting facility shall be provided with adequate ventilation equipment to exhaust inside air to the outside and introduce sufficient fresh air in the air-conditioning system (see 5.1.3) to accommodate the volume of compounds, solvents, and primers being used per hour. Force-fed, positive-pressure ventilation is necessary where vapors are generated. Pressure inside the potting and molding facility shall be maintained at a pressure 250 to 500 kPa (1 to 2 inches) of water higher than the ambient pressure outside the facility. Vapors and foreign matter shall be exhausted away from, down, and to the outside to avoid inhalation by the operator. The responsible safety agency shall be consulted to determine proper ventilation in ratio to the quantity of material being used.

5.1.3 Environmental Conditions. - The temperature of the molding and potting facility shall be maintained at 24 plus or minus 3 °C (75 plus or minus 5 °F), and relative humidity shall be maintained at 50 plus or minus 5 percent. Automatic equipment shall be installed to maintain these conditions. These conditions shall be maintained throughout all areas where mixing or other handling of potting or molding materials occurs or where these materials pass after being opened or relieved of their protective packaging. Workroom lighting should provide 1075 lux (100 footcandles) normal, 807 lux (75 footcandles) minimum, at 760 millimeters (mm) (30 inches) above the floor.

5.1.4 Cleanliness. - The potting and molding facility shall be isolated from such contaminants as dust, metallic particles, water, oil, and grease. Bench tops shall be protected from spillage by disposable coverings, and floors shall be cleaned frequently. Cleaning agents used within the facility shall be as specified in 4.1.1.d, and the cleaning process shall be as specified in 5.2.1.1.2.

5.1.5 Health and Safety Precautions. - When carelessly handled, the chemicals used for molding and potting may cause severe physiological reactions. The chemicals involved are safe when properly handled by trained personnel and when the following precautions are carefully observed:

a. Avoid ingestion and inhalation of vapors.

b. Avoid contact of solvents, primers, and compounds with the skin. Special care shall be taken to prevent contact with open breaks on the skin. Skin areas that do become exposed shall be cleaned with an approved cleaner and then with a nonabrasive soap and clean water. Cleansed jars, bottles, tools, or containers shall be individually used by personnel.

c. Eyes or mucous membrane accidentally contaminated shall be flushed with water and receive medical attention immediately.

d. Water deluge or flushing sink and eyewash fountain are recommended in juxtaposition to operations involving toxic skin-contaminate and inhalant materials.

e. Protective clothing shall be changed regularly and, when soiled by potting and molding materials, shall be laundered prior to reuse.

f. No smoking or flames shall be allowed within a room where compounds, primers, and solvents are being used. NO SMOKING and NO FOOD, BEVERAGES, OR TOBACCO ALLOWED IN THIS AREA signs shall be displayed in conspicuous places. Before smoking or eating outside the facility, personnel shall thoroughly clean exposed skin areas.

g. An emergency shower or eyewash fountain combination is recommended immediately outside the facility room.

h. Exits should be unobstructed from any point or area. Panic hardware shall be provided inside of exit doors.

i. Solvents, potting and molding compounds, and other flammable materials shall be stored only in ventilated metal cabinets or containers. Appropriate fire extinguishers shall be provided at 9-meter (30-foot) intervals throughout the facility.

NOTE

Supervisors shall conduct periodic inspections of personnel for physiological reactions such as itching rashes, blisters, cracks, defatted areas, and any dermatitis symptoms. Personnel exhibiting any physiological reaction shall be removed from contact with plastic and rubber chemicals until approved for continuance by the applicable medical office.

5.1.6 Inspection. - Facilities will be subjected to inspection for compliance with the requirements of this procedure by an authorized procuring-activity representative.

5.1.7 Personnel. - Training and certification of personnel shall be as follows:

a. The contractor shall provide training in the use of equipment and material employed including familiarization with the NASA specifications

and procedures to be used in the work. Personnel shall be certified by their company as inspectors or operators.

b. The contractor shall maintain appropriate training records, including the qualifying samples, for each individual trained. The contractor shall also submit an outline of a training program.

c. The KSC quality surveillance representative or delegated representative will review the outline for compliance with item a. above and will recommend approval or disapproval to the Contracting Officer.

d. The KSC quality surveillance representative or the delegated representative may require any individual to demonstrate proficiency in any area in which the representative has reason to question the quality of work being performed.

5.2 PREPARATION FOR POTTING AND MOLDING

5.2.1 Preparation of Cable Assemblies. - Prior to potting or molding, the cable assemblies shall pass an inspection for materials, workmanship, electrical continuity, short circuits, and isolation as specified by KSC-E-165. In all cases of shielding, bonding, and grounding, the applicable specification and design requirements for electrical configuration shall govern. All potting applications shall be coordinated with and shall conform to the basic electrical requirements for both shielded and unshielded cables.

In preparation of cables assemblies, the following items shall apply, as applicable.

5.2.1.1 Adhesion.

5.2.1.1.1 Pretest. - Pretest (see 5.2.3 and 5.2.3.1) all conductor jacket and sheath material to assure that proper adherence with the polyurethane molding or potting compounds can be achieved.

NOTE

When any of the insulation, jacket, or sheath material will not adhere properly, neoprene heat-shrinkable tubing conforming to MIL-I-23053/1 may be used as a base material, upon approval of the Contracting Officer, where the polyurethane would be in contact with the jacket or sheath.

5.2.1.1.2 Cleaning. - To ensure proper adhesion of the potting compound to all components of the connector, the inner body of the connector, wires, boot, and all other materials that will contact the compounds must be clean and free of any trace of grease, oil, wax, anodizing, hardcoat, iridite, or other contaminants. Any contaminated surface shall be cleaned by using a small stiff-bristled brush and MEK, trichloroethylene, or other approved solvent.

CAUTION

Do not expose wire insulation to the cleaning solvent beyond the time required for adequate cleaning.

MEK shall not be stored in or used from an open container. Only containers approved by the responsible safety agency shall be used.

5.2.1.2 Potting or Molding Over Epoxy. - When potting or molding over epoxy, abrade, break sharp edges, clean, and prime epoxy surface outside of conductor bundle (see 5.2.2.3 and 5.2.2.4).

5.2.2 Preparation of Connectors.

5.2.2.1 Protection Caps. - Protection caps shall be used at all times, including shipment, except during processes requiring mating connectors.

5.2.2.2 Mating Connectors. - Mating connectors are recommended for use when potting or molding connectors with resilient inserts. If mating connectors are not used, the fabricator must ensure that the contacts will stay in alignment and positions conforming to 75M13302. After mating connectors, back off coupling nut sufficiently to decompress insert materials. Salvaged connectors may be used for mating if pins, sockets, or other mating parts are not damaged.

5.2.2.3 Abrade. - Mask or otherwise protect conductors and finish of connectors and adapters in areas not specified to be abraded during the abrasion operation. Roughen (abrade) surfaces of rear of connectors that will contact potting or molding materials, using sandpaper or other approved materials to remove slick surfaces. Carefully remove all grit from assembly. Clean all connector threads and coupling nuts with approved solvent to remove all grease, lubricants, and foreign matter. Abrade rear threads of connector and threads of metal potting-molding adapter (where used) with sandpaper or other approved material so that the smooth surface

is removed. Do not abrade connector-front mating threads, mating threads of coupling nut, or any surfaces that do not contact potting or molding materials except connector-adapter interfaces. Abrade and prime flat butt surfaces of connectors, where applicable, to ensure adhesion of polyurethane. This process is required for jam-nut connectors and shall apply for similar-type connectors.

5.2.2.4 Priming. - On surfaces that will contact potting or molding compound, check for cleanliness, prime with primer supplied by manufacturer of compound to be used, and apply primer in accordance with the manufacturer's instructions. Check rear connection threads and mating-thread areas of adapter for cleanliness; prime with Loctite Corporation Locquic primer, or approved equal; and coat with thread-seize compound, Loctite Corporation retaining compound, or equal.

5.2.2.5 Assembly. - Perform the following steps, as applicable:

a. Where backshell adapters are used, assemble adapter to connector and tighten. Adapters that have no stops shall be tightened until stopped by the end of threads or by binding against flange or boss of connector. Adapters tightened against coupling nuts shall be backed off until coupling nuts are free. Adapters tightened against stops shall have torque applied to the values of table 1.

   In any case where binding of coupling nuts occurs, torque requirements shall be ignored and adapters shall be backed off until coupling nuts are free. After tightening and applying torque, if adapters have setscrews, tighten into rear threads of connectors. For no. 40 shell-size, heavy-duty connectors, except the new locking type, adapters shall have 4.8-mm (3/16-inch) holes drilled through the adapter and the rear connector shell on opposite sides approximately midway of thread interface (figure A-1 in appendix A). Take care that the drill is sleeved or otherwise prevented from reaching closer than 2.4 mm (3/32 inch) to contacts. Similar metal high-shear, press-fit pins shall be driven and peened so that the pins protrude no closer than 2.4 mm (3/32 inch) to a wire or contact.

   The driven surfaces of pins shall be flush with adapter outer surfaces. When design calls for overall shield to be connected through the connector, the resistance from the shield through the backshell to the connector shall be less than 100 milliohms.

Table 1. Torque Values for Backshells and Shield Compression Nuts

Thread Size	Torque Values, Minimum to Maximum, Foot-Pounds (Inch-Pounds)*					
	A	B	C	D	E	F
0.3125	(20 to 26)	(70 to 75)	--	(30 to 35)	(45 to 55)	
0.375	(20 to 26)	(70 to 75)	--	(30 to 35)	(45 to 55)	
0.4375	(20 to 26)	(70 to 75)	--	(30 to 35)	(45 to 55)	
0.50	(20 to 26)	(70 to 75)	--	(30 to 35)	(45 to 55)	
0.5625	(26 to 32)	(80 to 85)	--	(30 to 35)	(45 to 55)	
0.625	(26 to 32)	(90 to 95)	--	(30 to 35)	(45 to 55)	
0.6875	(30 to 36)	8 to 9	--	(30 to 35)	(45 to 55)	
0.75	(34 to 40)	9 to 10	10 to 12	(30 to 35)	(45 to 55)	
0.8125	(40 to 46)	10 to 11	11 to 13	(30 to 35)	(45 to 55)	
0.875	(46 to 50)	11 to 12	12 to 14	(30 to 35)	(45 to 55)	
0.9375	(50 to 55)	12 to 13	12 to 14	(30 to 35)	(45 to 55)	
1.00	(55 to 60)	13 to 14	14 to 16	(30 to 35)	(45 to 55)	
1.0635	(60 to 65)	16 to 17	16 to 18	(30 to 35)	(45 to 55)	
1.125	(70 to 75)	18 to 19	19 to 21	(30 to 35)	(45 to 55)	
1.1875	(75 to 80)	20 to 21	21 to 23	(30 to 35)	(90 to 110)	
1.25	(80 to 85)	21 to 23	23 to 25	(30 to 35)	(90 to 110)	
1.3125	(85 to 90)	23 to 25	25 to 26	(30 to 35)	(90 to 110)	
1.375	(90 to 95)	24 to 25	26 to 28	(30 to 35)	(90 to 110)	
1.4375	8 to 9	26 to 28	28 to 30	(30 to 35)	(90 to 110)	
1.50	8 to 9	28 to 30	30 to 32	(30 to 35)	(90 to 110)	
1.625	9 to 10	28 to 30	30 to 35	(30 to 35)	(90 to 110)	
1.75	10 to 11	30 to 32	32 to 36			
1.875	11 to 12	32 to 34	36 to 38			
2.00	12 to 13	36 to 38	40 to 43			
2.0625	13 to 14	38 to 40	40 to 43			
2.125	14 to 15	40 to 42	42 to 44			
2.25	14 to 15	42 to 44	44 to 48			
2.3125	15 to 16	44 to 46	45 to 48			
2.375	16 to 17	46 to 48	48 to 50			
2.50	17 to 18	48 to 50	50 to 55			
2.625	18 to 19	50 to 55	55 to 60			
2.75	18 to 19	55 to 60	62 to 67			
2.875	19 to 20	55 to 60	62 to 67			
3.00	20 to 21	60 to 65	65 to 70			

Column A: Backthreads on die-cast aluminum parts (MIL-C-5015) and all jam nuts
Column B: Backthreads on extruded and machine aluminum and steel parts MIL-C-22992, MIL-C-26482, and MIL-C-38999)
Column C: Double-stud threads (MIL-C-22992 coupling nut)
Column D: All accessories with three or less modified threads (crest removed)
Column E: All accessories with three or less unmodified threads

1 foot-pound = 1.355818 newton-meter
1 inch-pound = 0.112 newton-meter

b. Where coupling nuts obstruct setscrews or lockpins, coupling nuts shall have one 9.5-mm (3/8-inch) hole drilled through to allow access to screws or pins. Trimming may be necessary to allow entry into a plug hull.

c. Break exposed sharp edges.

d. Protect all bared surfaces (setscrews, press-fit pins, holes, etc. that will be exposed after molding) in accordance with MIL-STD-171, finishes 4.10 and 7.3.3. Paint one coat of enamel in accordance with TT-E-529. Color shall be similar to connector color.

5.2.3 Preparation of Cable. - Proper preparation of cable assemblies depends on the applicable molding or potting compound and primer for the sheath material to be used. To determine whether the sheath material is neoprene, polyvinyl chloride (PVC), or polyethylene, touch a hot soldering iron to a scrap portion of the sheath material. If the sheath is PVC, it will melt and string out. If it is neoprene, the immediate area touched will crack and harden. If it is polyethylene it will melt but not string out.

5.2.3.1 Primer. - There are many types and formulations of neoprene, PVC, and polyethylene. The use of a primer may be necessary for some of these. To determine if a primer is required, the rubber test specimen and the vinyl test specimen test methods outlined in KSC-SPEC-E-0029 shall be made on specimens of the neoprene or PVC in question. For polyethylene test production samples, see 5.2.3.5.

5.2.3.2 Wicking. - To prevent wicking from occurring during cable molding or potting operations using elastomeric compounds where cable jacket (sheath) material is used, seal the cable jacket (sheath) terminations with an elastomeric dielectric sealant (see 4.1.2). The seal shall be made at the jacket (sheath) termination and sealant flow shall be directed around and through all conductors. The sealant shall not exceed 6.4 mm (1/4 inch) above termination into the jacket (sheath). The diameter of the seal shall not exceed the cable diameter, including the cable jacket (sheath), and the overall length shall be 19.0 mm (3/4 inch) maximum. The sealant shall be processed in accordance with the manufacturer's instructions.

5.2.3.3 Preparation of Neoprene Sheath. - Neoprene sheath cables shall be prepared as follows:

a. Remove all grease, oil, wax, and other contaminants with MEK from the area to be covered by the molding or potting compound.

b. The sheath shall be abraded 3.2 mm (1/8 inch) plus or minus 1.5 mm (1/16 inch) above the area to be covered with the molding compound. Trimming may be necessary to allow entry into some backshells.

c. Clean the abraded area with a nonmetallic bristled brush.

d. Wipe the abraded area with a clean cloth dampened with MEK, changing the wiping area of the cloth as it becomes soiled. Wipe the cable dry with a clean cloth or dry with a jet of clean, dry air. A disposable wiper such as Kimwipes, type XL, manufactured by Kimberly-Clark Corporation, or an approved equal, may be used in lieu of the cloth.

e. If a primer is required, prime the abraded sheath area with the correct primer for the approved compound. The primer shall be applied 1.5 mm (1/16 inch) plus or minus 0.8 mm (1/32 inch) above the area to be covered with the molding or potting compound. Allow to dry as instructed by the manufacturer.

5.2.3.4 Preparation of PVC Sheath. - PVC sheath cables shall be prepared as follows:

a. Brush or wipe the sheath 3.2 mm (1/8 inch) plus or minus 1.5 mm (1/16 inch) above the area to be covered with the molding and potting compound with uncontaminated MEK until the surface becomes tacky.

b. If a primer is required, prime the tacky area with the correct primer for the approved compound. The primer shall be applied 1.5 mm (1/16 inch) plus or minus 0.8 mm (1/32 inch) above the prepared surface to be covered with the molding and potting compound. Allow to dry as instructed by the manufacturer.

5.2.3.5 Preparation of Polyethylene Sheath. - Before potting and molding production cables, sample cables shall be made and tested as follows:

a. Prepare sample cable assembly.

(1) Apply manufacturer's recommended primer according to manufacturer's instructions.

(2) Mold in accordance with this standard.

(3) After curing and when cable assembly is at room temperature, the cable shall be flexed and tested for adhesion of the molding material to be the cable sheath, in accordance with this standard.

b. If satisfactory adhesion is not obtained, prepare a second sample cable assembly.

(1) Apply a length of neoprene or PVC shrink tubing (MIL-I-23053/1 or /2) over the end of the conductor insulation and cable sheath. Tubing shall extend along the cable sheath approximately 38 mm (1-1/2 inches) above the molded portion.

(2) Mold requirements shall be in accordance with this standard, as applicable.

(3) After curing and when cable assembly is at room temperature, the cable shall be flexed and tested for adhesion of the molding material to the cable sheath, in accordance with this standard.

c. Production cables shall be made using the method providing the proper adhesion.

NOTE

Polyurethane sheath cable may soon be supplied instead of neoprene. The adherence of polyurethane to molding material is excellent and requires only the cleaning routine prior to incremental pouring of polyurethane.

5.2.4 Potting Setup. - Potting setup shall be as follows:

a. Assemble the mating connector (see 5.2.2.2) to ensure proper contact alignment during potting. The mating connector shall remain in place until sufficient curing time has elapsed.

b. Clamp the connector in an upright, level, and secure position to prevent any movement of the components. The wire or cable shall be clamped in a vertical position to avoid any strain on the terminal joints.

c. The wire bundle shall be centered with respect to the connector and potting boot. Bundling shall not cause conductors to impose lateral strain on terminals. Unless otherwise specified, lateral clearance to surface of potting boot shall be 1.5 mm (1/16 inch) minimum for all internal parts and end of sheath.

5.2.5 Mold Preparation. - Molds shall be prepared as follows:

a. Examine and clean all surfaces and vent ports prior to each use.

b. Using a brush, clean cloth, or aerosol spray, apply approved mold release to all surfaces of the mold and dry in an oven at 65 plus or minus 5 °C (149 plus or minus 9 °F). Do not leave marks on the cavity surfaces. Polish as necessary to obtain a blemish-free surface.

NOTE

If a mold is being used for the first time, the molding release application and drying procedure in step b. above shall be performed twice.

CAUTION

If electronic devices are inserted into the molding, be aware of specified high-temperature limit for the devices.

5.2.6 Molding Setup. - The mold shall be assembled as follows:

NOTE

Prior to potting or assembly into a mold, electrical connectors shall be inspected for coupling nut binding. The coupling nut must rotate as freely as required for proper connector engagement.

a. Examine the cable assembly and determine that preparation procedures for neoprene, PVC, or polyethylene, as applicable, are complete as outlined in 5.2.3.

b. Examine the assembly for freedom from contamination and foreign particles.

c. Unless otherwise specified, lateral clearance to the surface of the mold shall be 1.5 mm (1/16 inch) minimum from all internal parts and from the end of the cable sheath.

d. When inserting the cable sheath into the mold, the sheath should be pressed as far as possible toward the connector to afford slack in conductors. Shield rings should be checked to ascertain that they are within plus or minus 10 degrees perpendicular to the axis of the cable.

e. Before assembly of mold halves, all requirements of configurations and dimensions should be fully checked against appendix A and the design drawings as specified. Where configuration and dimensional requirements are hampered, consult cognizant design activity before molding.

f. Assemble the two half sections of the mold around the cable assembly.

g. Before tightening the clamping screws, examine the assembly for correct alignment and positioning of the cable and connector.

h. Tighten the clamping screws sufficiently to prevent leakage of the compound.

i. Clamp the assembled mold and cable in a vertical, level, and secure position with the cable connector down. The cable shall be vertically clamped above the mold to maintain alignment.

j. The mold shall be clamped to restrict movement while compound is injected.

5.3 PREPARATION OF COMPOUNDS

5.3.1 Epoxy Potting Compounds. - Determine that the two-part material, resin and activator, has been successful acceptance tested as specified in MSFC-SPEC-222 and that the shelf life has not expired. Use the following steps in preparing the compound for application:

a. Examine the contents of both parts for solidification.

b. If either of the parts has thickened, solidified, or crystallized, heat the part to the manufacturer's recommended temperature. When heating, a thermometer shall be used to determine the actual material temperature. Stirring is essential during heating to assure uniformity and to

hasten the melting procedure. Allow both parts to cool in room ambient temperature at 21 to 24 °C (70 to 75 °F) before mixing. Do not artificially cool the material.

c. Place both parts (in the proper proportional ratios) in a clean, dry, nonporous container having a capacity of at least four times the volume of the combined parts. Blend the parts thoroughly by mechanical agitation or by stirring with a clean metal spatula. Avoid fast stirring that may entrap excessive air and reduce application life.

d. Place the container in a vacuum chamber and reduce the pressure to a maximum absolute pressure of 3.4 kPa (0.5 psi). Maintain this pressure until foaming subsides, but not more than 20 minutes.

e. Transfer the mixed compound from the mixing container to the injection-gun cartridge by carefully and slowly pouring the compound down the inside of the cartridge, using care not to entrap air, until the desired level in the cartridge is reached. Put the plastic plunger in place and insert the cartridge into the gun.

NOTE

Do not degas the compound by use of a centrifuge.

5.3.2 Preparation of Elastomeric Compounds.

5.3.2.1 Liquid. - The liquid compound shall be two-part units, consisting of base resin and activator, and shall be prepared as follows:

a. Determine that the material has been successfully acceptance tested as specified in KSC-SPEC-E-0029 and that the shelf life has not expired.

CAUTION

Use premeasured kits as supplied by the manufacturer. Do not use broken or partially used kits.

b. Examine the contents of the base resin and activator for solidification.

c. If either of the parts has thickened, solidified, or crystallized, heat the part to the manufacturer's recommended temperature. When heating, a thermometer shall be used to determine the actual material tempera-

ture. Stirring is essential during heating to assure uniformity and to hasten the melting procedure. Allow both parts to cool in room ambient temperature at 21 to 24 °C (70 to 75 °F) before mixing. Do not artificially cool the material.

d. Place the base resin and activator in a clean, dry nonporous container having a capacity of at least six times the volume of the combined parts. Blend the parts thoroughly by mechanical agitation or by stirring with a clean metal spatula. Avoid fast stirring that may entrap excessive air and reduce application life.

e. Place the container in a vacuum chamber and reduce the pressure to a maximum absolute pressure of 3.4 kPa (0.5 psi). Maintain this pressure until foaming subsides, but not more than 20 minutes.

NOTE

Do not degas the compound by use of a centrifuge.

f. Transfer the degassed compound into the injection-gun cartridge by flowing the compound down the inside of the cartridge, using care not to entrap air.

g. Put the plastic plunger in the cartridge next to the molding and potting material. Exercise care not to entrap air while inserting the plunger.

5.3.2.2 Thawing of Premixed, Frozen Cartridges. - It is recommended that the thawing time and temperature of the frozen cartridges be closely controlled to obtain sufficient application life. An increase in either thawing time or temperature will reduce application life, and a decrease in either thawing time or temperature will result in an incomplete thaw. The results are the responsibility of the molding facility. The following steps are recommended for thawing premixed, frozen cartridges:

a. When stored at minus 4 to minus 7 °C (minus 40 to minus 45 °F), remove the cartridge from storage and thaw for 30 plus or minus 1 minute at 49 plus or minus 5 °C (120 plus or minus 9 °F). When storage at minus 26 to minus 28 °C (minus 78 to minus 83 °F), remove the cartridge from storage and thaw for 40 plus or minus 1 minute at 49 plus or minus 5 °C (120 plus or minus 9 °F).

NOTE

A heating block or controlled heat lamps may be used for thawing frozen cartridges. Other thawing methods may be used upon approval by the procuring activity.

b. During the thawing process, the cartridge shall be maintained in an upright position, nozzle end down with cap plug in place, to prevent air from entering and becoming trapped within the compound.

c. Completely thaw and check the plunger to make sure that no air is entrapped.

d. When once thawed, premixed, frozen cartridges shall not be refrozen. The cartridges shall not be used after application life has expired.

5.4 POTTING INSTRUCTIONS

Epoxy or elastomeric compound shall be used for potting, as specified by the Contracting Officer. The following suggested potting techniques vary from shop to shop because of equipment, facilities, or experience of personnel.

5.4.1 Inspection. - Examine cable assembly and determine that preparation procedures, as applicable, are complete and that assembly is free of contamination and foreign particles.

5.4.2 Injection.

a. The injection gun should have a cartridge of prepared compound ready for use.

b. When an air-powered injection gun is to be used, attach the injection gun to the air supply (see 4.3.3 and 4.3.7) using the applicable hose connection. Attach the correct size gun nozzle suitable for the potting job and adjust air pressure for a slow, even flow of compound [approximately 69 to 103 kPa (10 to 15 psi) (gage)].

c. Test the injection gun for a free and even flow of compound from the nozzle.

d. Carefully insert the nozzle tip near the bottom of the connector for flow of compound around terminals (see alternate step e. below). Set the compound flow evenly by keeping the nozzle tip at the swell level. Avoid air entrapment during the flow operation.

e. When necessary, A 6.4-mm (1/4-inch) access hole may be drilled in the boot 6.4 mm (1/4 inch) above the back edge of the connector and a nozzle tip inserted here. Tape hole when filling is complete.

f. If the compound rises unevenly, reposition the nozzle to allow level distribution. When repositioning the nozzle, the flow of compound should be stopped. Lifting the nozzle while the compound is flowing will cause folding and voids in the fill.

g. Continue injection of the compound until the boot is full or predetermined level is attained. Allow the compound to settle for 5 minutes. This lets any entrapped air escape. When the compound settles, replenish to the required convex level. Do not allow the compound to enter the bonding holes on the molding adapter.

h. Cover exposed connections with compound.

i. If no injection gun is available, introduce the compound into the prepared connector by carefully hand-pouring the compound down one side of the connector in such a manner as to allow the compound to flow between the wires and contacts, entrapping a minimum amount of air. Fill the connector to the predetermined level, allow to set for 5 minutes, then fill to the required convex level.

5.4.3 Curing. - Curing schedules shall be selected from those recommended by the manufacturer, with limitations as specified in the contract or purchase order for the compound (MSFC-SPEC-222 for epoxy or KSC-SPEC-E-0029 for elastomeric compound).

5.4.4 Inspection.

5.4.4.1 Connectors. - After curing, inspect pins for length and condition according to 75M13302.

5.4.4.2 Potting. - The potted cable shall be inspected for hardness, genial appearance, and quality of workmanship. The surfaces of the potted area shall be free from voids, blisters, tackiness, soft spots, cracks, lumps, or any defect indicative of

low quality or poor workmanship. The hardness shall be determined by three readings of a Shore durometer, or approved equivalent, using D scale for epoxy or A scale for elastomeric compound. The hardness of the cured material shall conform to the approved products list hardness rating for each applicable listed product.

CAUTION

Inspection personnel shall use care in handling assemblies potted with epoxy resins. The rigid, sharp edges of the cured resins in contact with the cable sheath may cut, mar, or mutilate the sheath material if the cable is forcefully handled

5.4.5 Repair. - Rework or repair of individual defects shall be at the discretion of the procuring activity. Repairable or reworkable defects shall be limited to those capable of being repaired or reworked without affecting serviceability or leaving undesirable latent defects. After repair or rework, the assembly shall be inspected to determine conformance to 5.4.4.

5.5 MOLDING INSTRUCTIONS

The following suggested molding techniques may vary from shop to shop because of equipment, facilities, or experience of personnel. Refer to 79K14177 for more explicit instructions.

5.5.1 Inspection. - Prior to molding, examine the setup and determine that preparation, in accordance with 5.2.6, has been made and is in order.

5.5.2 Injection.

a. The injection gun should have a cartridge of prepared compound inserted and ready for use.

b. Attach the injection gun to the air supply (see 4.3.7) using the applicable hose connection. Attach the correct size gun nozzle suitable for the molding job and adjust air pressure for slow, even flow of compound [approximately 69 to 103 kPa (10 to 15 psi) (gage)].

c. Test the injection gun for free and even flow of compound from the nozzle.

d. Place the nozzle of the loaded cartridge into the injection port or mold, maintaining the required pressure. Force the molding compounds slowly into the mold until the compound emerges from the vent holes.

e. Slowly withdraw the gun nozzle from the injection port and maintain the required pressure on the gun to allow the injection port to be filled with compound. Plug the injection port and allow the compound to settle in the mold.

f. Allow 15 to 20 minutes for settling, then inject additional compound into the mold until the compound is flowing from the vents. Slowly withdraw the gun nozzle from the injection port, maintaining the required pressure on the gun to allow the injection port to be filled with compound.

g. Plug the injection port on the side of the mold.

5.5.3 Curing.

5.5.3.1 Curing Schedule. - Curing schedules shall be selected as recommended by the manufacturer, except that the limitation as specified in KSC-SPEC-E-0029 shall govern maximum curing time.

5.5.3.2 Molded Assembly. - The molded assembly shall be submitted for inspection only after the assembly has been fully cured and cooled to room temperature.

5.5.4 Inspection.

5.5.4.1 Inspection Test. - The molded cable shall be inspected for hardness, general appearance, and quality of workmanship. The hardness shall be determined by three readings using a Shore Instrument and Manufacturing Company scale durometer, or an approved equal. The hardness of the cured compound shall conform to the approved products list hardness rating for each applicable listed product. The molded or potted surfaces shall be free of surface bubbles, blisters, tackiness, gas pockets, and other defects.

NOTE

Some rejected assemblies may be used as test fixtures or emergency spares or may otherwise be acceptable to the United States Government. Other rejected assemblies may possibly be reworked or used for mating purposes; therefore, potted or molded assemblies that have been disqualified or rejected shall not be destroyed until the cognizant design activity has been notified and discrepancies have been discussed with an inspection representative.

5.5.4.2 Transparency. - When drawings specify clear or transparent molding, some coloration or cloudiness is allowable. Degree of transparency shall be such that after curing, shield rings, conductors, and other internal details shall be visible under ordinary light approximately 430 lux (40 foot-candles) to the unaided eye. Bubbles from trapped voids shall be permissible if not more than 3.2 mm (1/8 inch) in diameter and not closer than 1.6 mm (1/16 inch) to conductor terminations or mold outer surface. There shall be no more than five visible bubbles as described above, per cubic inch, in any one mold.

5.5.4.3 Adhesion. - After full cure and after the assembly has cooled to room temperature, the cable shall be flexed five times at the tapered molded portion to determine whether the material is securely bonded to the cable. In no instance shall undue force be applied in order to determine adhesion. A blunt probe made of wood or plastic shall be used to test the adhesion of the molding or potting compound the electrical connector. Care shall be taken to avoid damage to the assembly during inspection. Separation of the material from the cable or connector shall be cause for rejection.

5.5.4.4 Connectors. - After curing, inspect pins for length and condition according to 75M13302.

5.6 REPAIR AND REWORK

5.6.1 Repairable Defects. - Repairable defects shall consist of those defects capable of repair without affecting serviceability or without leaving undesirable latent effects as determined by the procuring activity. After repair, the assembly shall again be inspected to determine conformance to 5.5.4.1 and 5.5.4.4.

5.6.2 Rework Procedure.

5.6.2.1 Minor Cavity. - In situations where a minor cavity defect is present on a molded surface, the following rework procedure is permissible:

a. Determine that the rework surface is clean.

b. Remove contaminants by wiping with MEK.

c. Prepare approved patch compound in accordance with the manufacturer's instructions and fill the cavity with mixed compound.

d. Position a sheet of polyethylene film, or other proper mold, over the filled cavity and tape securely in place using heat-resistant, pressure-sensitive tape or mold-tightening screws.

e. Cure according to the manufacturer's instructions.

f. Remove tape and polyethylene film, or the mold.

5.6.2.2 Major Cavities. - In situations where major cavity defects are present on the molded surface, the following rework procedure is permissible:

NOTE

Where the cavity defects are present only in the taper portion of the mold, confine the rework procedure to this taper portion of the mold only.

a. Mask the entire outside of the electrical connector with four or more tape wraps. Mask cable sheath immediately adjacent to the termination of the taper portion of the cable molding with four or more tape wraps.

b. Use a high-speed electric tool, Dremel Div. Moto Tool model no. 275, or approved equal, equipped with Dremel Div. cutter no. 192, or approved equal, to remove a maximum of 2.54 mm (0.100 inch) plus or minus 0.064 mm (0.0025 inch) from the entire surface or from the taper portion only of the cable molding.

CAUTION

Extreme care must be exercised by the operator to avoid nicking or in any manner touching the cutter to the electrical connector or cable sheath.

c. Clean the area to be repaired with a nonmetallic bristled brush or apply a jet of clean, dry air 620 kPa (90 psi) (gage) maximum to the area.

d. Using an identical mold with which the original molding was accomplished remold in accordance with 5.5.2.

e. Curing shall be completed in accordance with 5.5.3.

5.6.3 Inspection. - All rework shall be inspected as outlined in 5.5.4.

5.7 REPORTS

Reports shall be as required by the procuring activity.

6. NOTES

6.1 Intended Use.

This standard is intended to be used in the establishment of uniform engineering practices and methods and to ensure the inclusion of essential requirements in the fabrication of electrical terminations for cables used in instrumentation and control systems of facilities, systems, and equipment used to support the operations of test, checkout, servicing, and launch of space vehicles and payloads at KSC.

NOTICE: The Government drawings, specifications, and/or data are prepared for the official use by, or on the behalf of, the United States Government. The Government neither warrants these Government drawings, specifications, or other data, nor assumes any responsibility or obligation, for their use for purposes other then the Government project for which they were prepared and/or provided by the Government, or an activity directly related thereto. The fact that the Government may have formulated, furnished, or in any way supplied the said drawings, specifications, or other data is not to be regarded, by implication or otherwise, as licensing

in any manner the holder or any other person or corporation, nor conveying the right or permission, to manufacture, use, or sell any patented invention that may relate thereto.

Custodian:	Preparing Activity:
NASA - John F. Kennedy Space Center	John F. Kennedy Space Center Instrumentation and Controls System Division Engineering Development Directorate

APPENDIX A

ILLUSTRATIONS

The following illustrations* are included in this appendix:

Figure	Title	Page
A-1	Definition of Potting and Molding Terms	A-2
A-2	MIL-C-26482 Connectors	A-3
A-3	Shield/Shield Adapter	A-5
A-4	MIL-C-5015 Connectors	A-6
A-5	MIL-C-22992 Connectors	A-8
A-6	Banana Plug (Configuration 1)	A-11
A-7	Banana Plug (Configuration 2)	A-11

*These illustrations contain recommended standard configurations for cable assembly terminations of MIL-C-5015, MIL-C-22992, MIL-C-26482, and banana plugs. MIL-C-38999, 40M38277, 40M38298, and 40M39569 connectors shall be molded similar to the MIL-C-26482 connectors. These illustrations do not take into account the insertion of electronic devices into cable molding terminations. Individual design sheets may be more detailed than the illustrations.

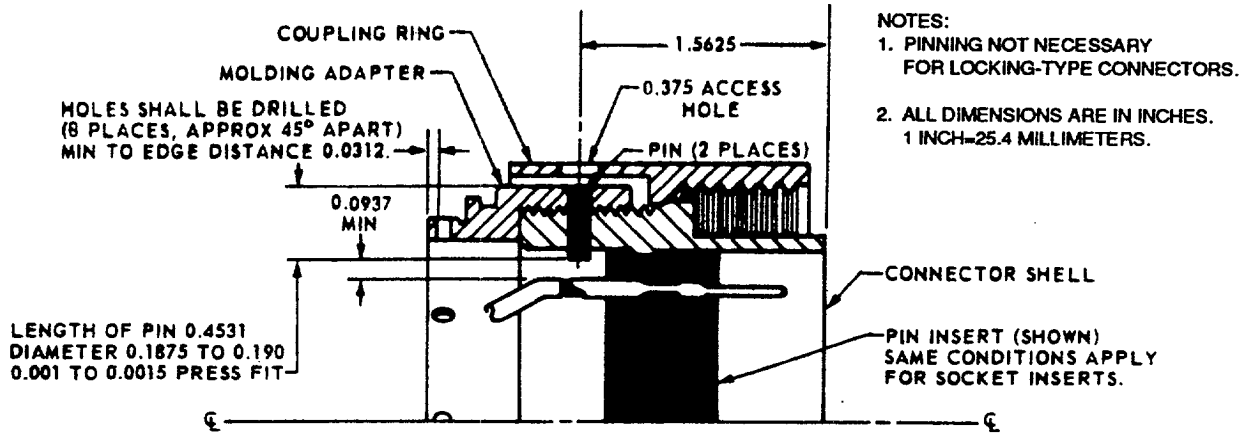

MIL-C-22992 (OLD STYLE)

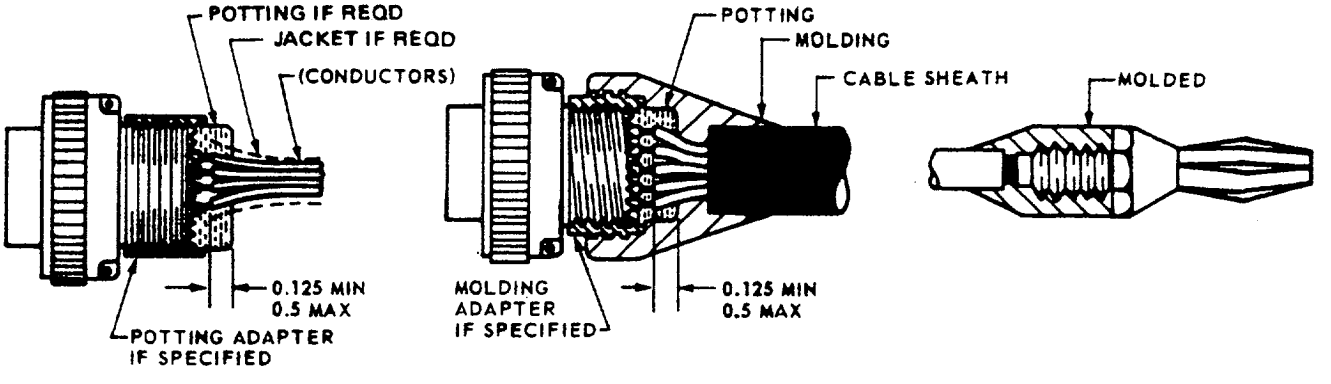

POTTED
(INDIVIDUAL CONDUCTORS)

POTTED AND MOLDED
(FOR SHEATHED CABLES)

MOLDED

IF REQUIRED BY THE DESIGN DRAWINGS, POTTING WITH EPOXY SHALL BE USED ONLY OVER EXPOSED CONDUCTOR TERMINATIONS.

Figure A-1. Definition of Potting and Molding Terms

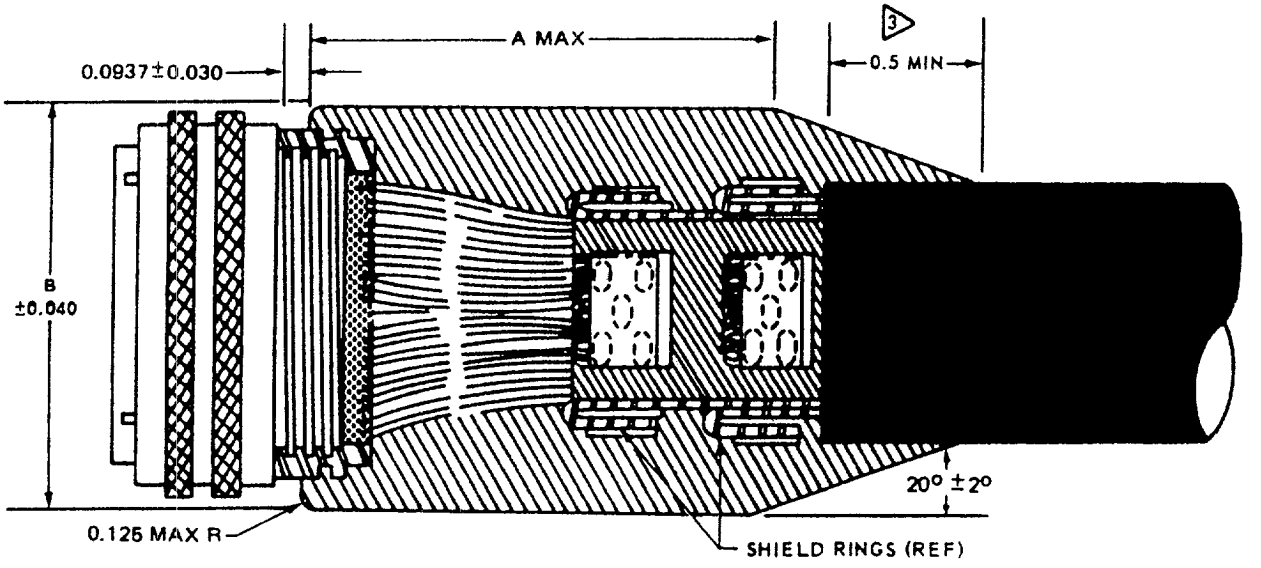

MIL-C-26482 CABLE PLUG, DOUBLE-SHIELDED CABLE

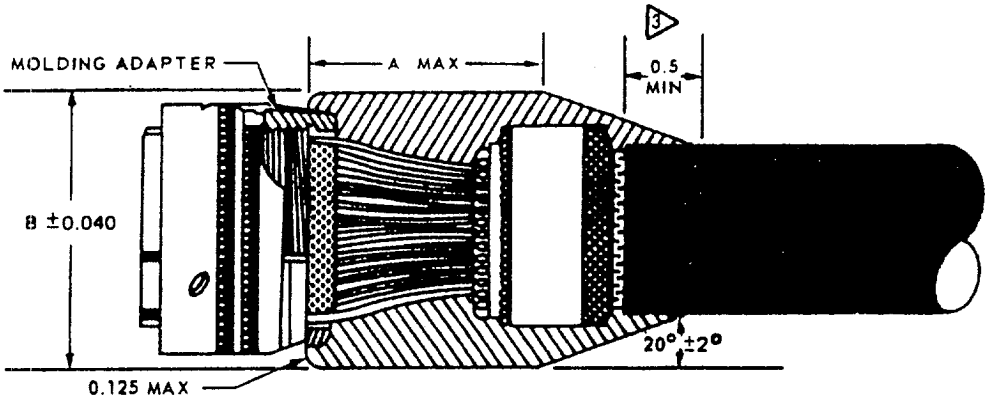

MIL-C-26482 PLUG, SINGLE-SHIELDED CABLE

NOTES:

1. ALL DIMENSIONS ARE IN INCHES. 1 INCH=25.4 MILLIMETERS.
2. SEE SHEET 2 FOR DIMENSION TABLE.
3. FOR BULK CABLE LESS THAN 0.60 DIAMETER USED WITH SHELL SIZE 10SL, 14, AND 14S, MINIMUM INSERTION IS 0.375.
4. OMIT EPOXY POTTING IF CONNECTOR IS CRIMP TYPE (SERIES 2).

Figure A-2. MIL-C-26482 Connectors (Sheet 1 of 2)

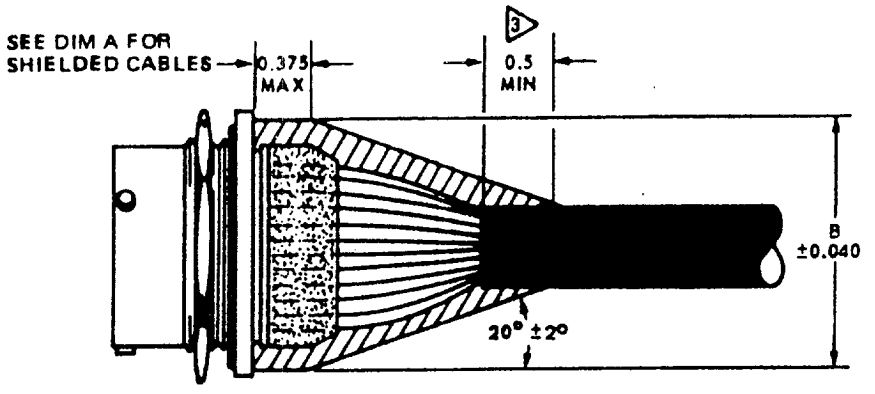

MIL-C-26482, SERIES 1, JAM NUT RECEPTACLE TYPE
SERIES 2 JAM NUT CONNECTORS HAVE BACKTHREADS.

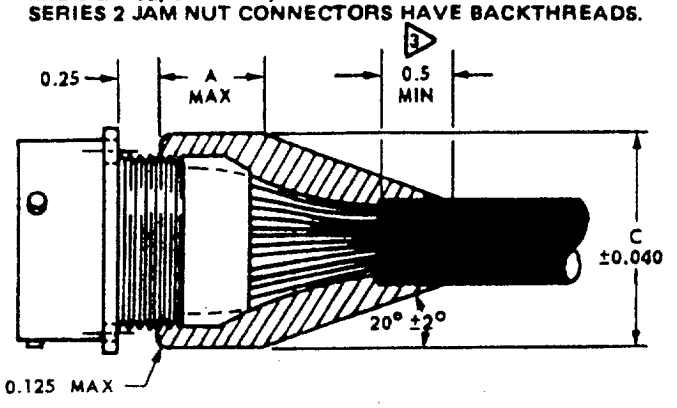

MIL-C-26482 FLANGE RECEPTACLE

(MOLD ONLY CONNECTORS WITH SHEATHED CABLES UNLESS OTHERWISE SPECIFIED)

MIL-C-26482 BOX-MOUNTING-TYPE RECEPTACLE (NOT THREADED)

SHELL SIZES		6	8	10	12	14	16	18	20	22	24
UNSHIELDED	A DIM	1.000	1.000	1.000	1.000	1.000	1.000	1.000	1.000	1.000	1.000
	B DIM	.750	.875	1.000	1.125	1.250	1.375	1.500	1.625	1.750	1.875
	C DIM	.500	.625	.750	.875	1.000	1.125	1.250	1.375	1.500	1.625
SINGLE SHIELDED	A DIM	1.500	1.500	1.500	1.500	1.500	1.625	1.750	2.000	2.250	2.500
	B DIM	SAME SIZE AS FOR UNSHIELDED CABLES									
	C DIM	SAME SIZE AS FOR UNSHIELDED CABLES									
DOUBLE SHIELDED	A DIM	1.500	1.625	1.750	1.875	2.000	2.125	2.250	2.500	2.750	3.000
	B DIM	SAME SIZE AS FOR UNSHIELDED CABLES									
	C DIM	SAME SIZE AS FOR UNSHIELDED CABLES									

NOTE: ALL DIMENSIONS ARE IN INCHES. 1 INCH=25.4 MILLIMETERS.

Figure A-2. MIL-C-26482 Connectors (Sheet 2 of 2)

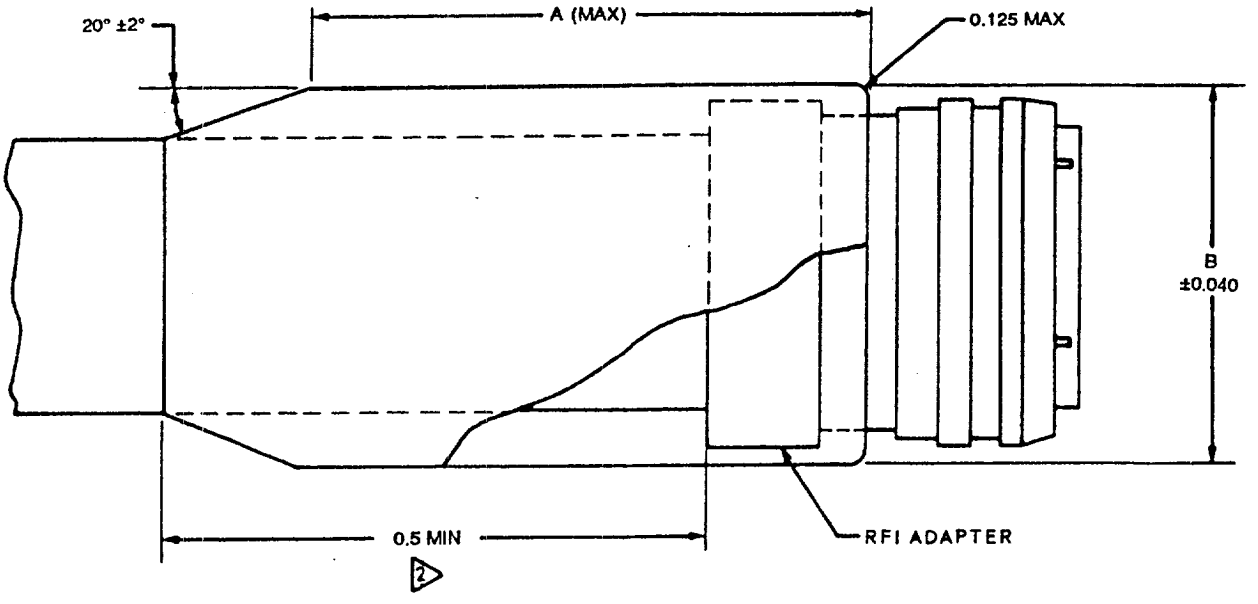

CONN SHELL SIZE	DIMENSIONS	
	A	B
8	1.40	1 000
12	1.40	1.375
14	1.50	1.375
24	2.50	1.750

NOTES:

1. ALL DIMENSIONS ARE IN INCHES. 1 INCH=25.4 MILLIMETERS.

2 FOR BULK CABLE LESS THAN 0.60 DIAMETER USED WITH SHELL SIZE 10SL, 14, AND 14S, MINIMUM INSERTION IS 0.375.

Figure A-3. Shield/Shield Adapter

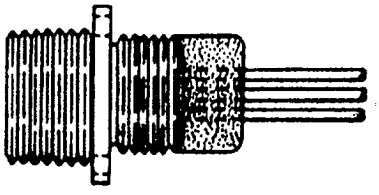

WALL MTG TYPE RECEPTICAL (SHOWN)
BOX MTG TYPE RECEPTICAL
(POT ONLY, UNLESS OTHERWISE SPECIFIED)

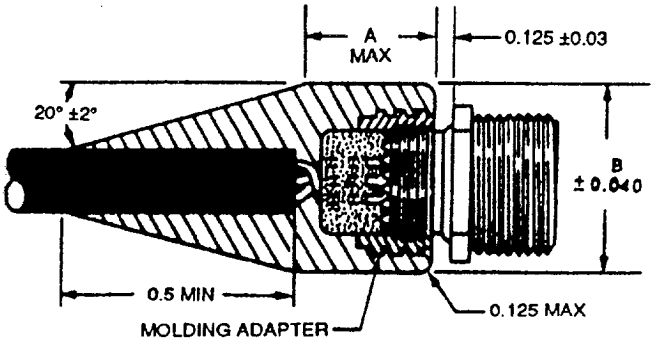

CABLE CONNECTING TYPE PLUG

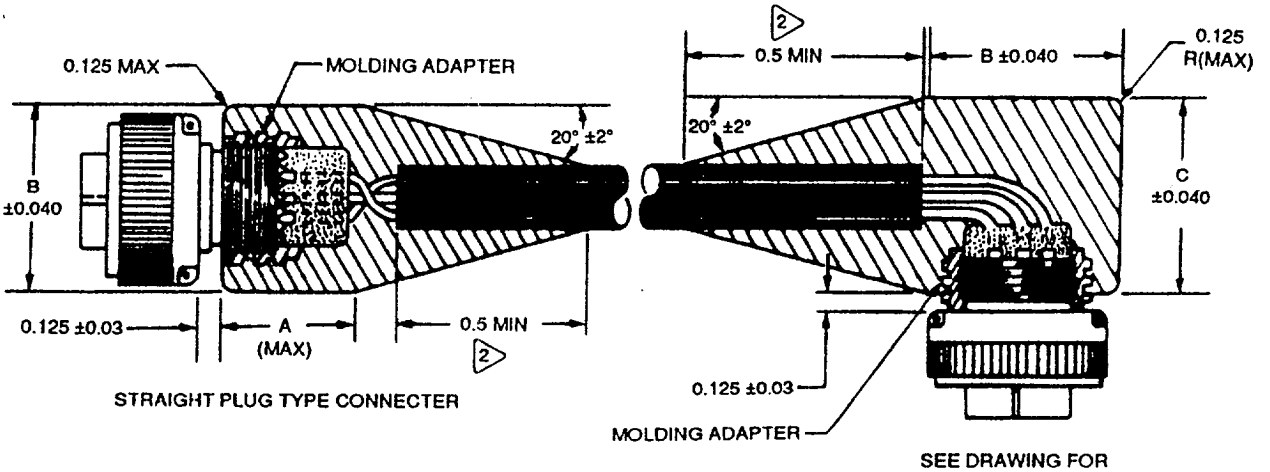

STRAIGHT PLUG TYPE CONNECTER

SEE DRAWING FOR KEY POSITION WITH 90° MOLD, SHALL BE WITHIN ±5° OF SPECIFIED POSITION.

NOTES:

1. ALL DIMENSIONS ARE IN INCHES. 1 INCH=25.4 MILLIMETERS.

2. FOR BULK CABLE LESS THAN 0.60 DIAMETER USED WITH SHELL SIZE 10SL,14, AND 14S, MINIMUM INSERTION IS 0.375.

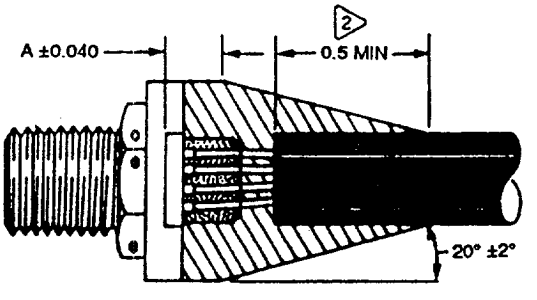

JAM-NUT TYPE CONNECTOR
(MOLD ONLY WHEN USED WITH A SHEATHED CABLE)

Figure A-4. MIL-C-5015 Connectors (Sheet 1 of 2)

Shell Size	A Dimension (Unshielded)	A Dimension (Shielded)	B Dimension (Any)	C Dimension (Any)
10SL	0.625	1.000	1.125	1.125
12S	0.625	1.000	1.187	1.187
14S	0.625	1.000	1.312	1.312
16S	0.625	1.000	1.437	1.437
18	1.125	1.250	1.562	1.562
20	1.250	1.375	1.750	1.750
22	1.250	1.500	1.812	1.812
24	1.375	1.625	2.000	2.000
28	1.500	1.875	2.250	2.250
32	1.500	2.000	2.500	2.500
36	1.500	2.250	2.750	2.750

NOTE: ALL DIMENSIONS ARE IN INCHES. 1 INCH =25.4 MILLIMETERS.

Figure A-4. MIL-C-5015 Connectors (Sheet 2 of 2)

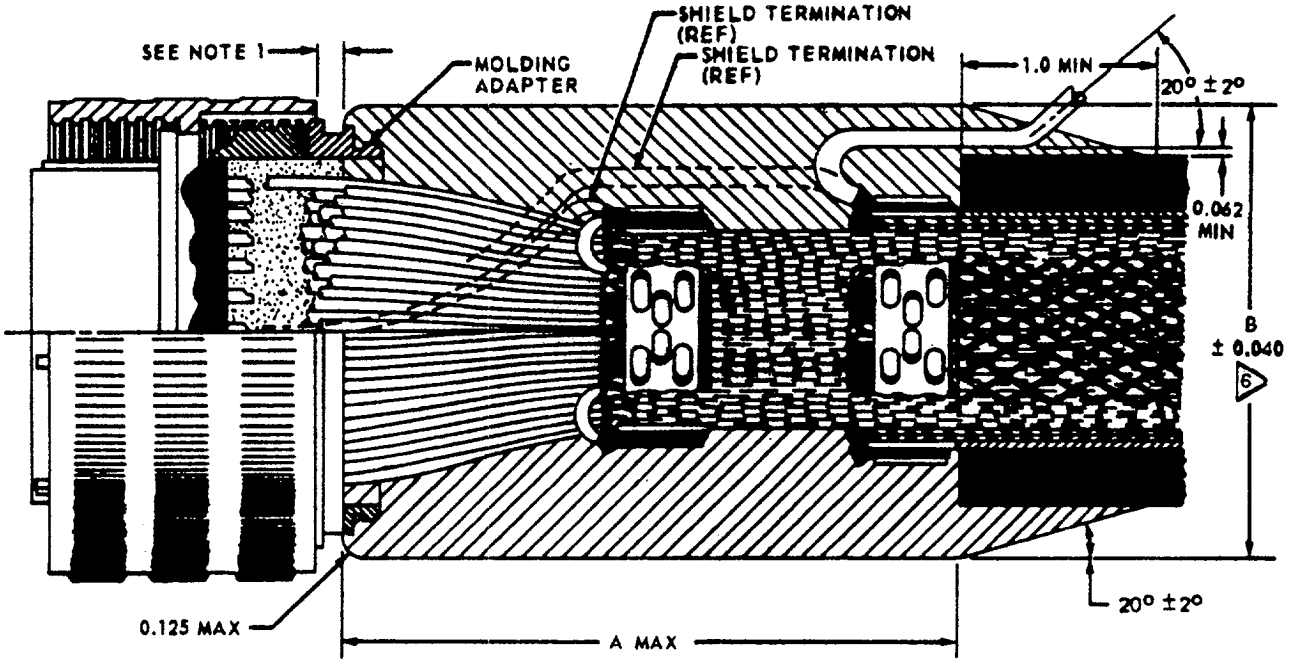

SERVICE CLASS P OR R

NOTES:

1. WHEN MOLDING HEAVY-DUTY FLANGE MOUNT RECEPTACLE, ETC. CONNECTORS (WHERE REQUIRED), NO MOLDING SLEEVE IS REQUIRED; BUT THIS DIMENSION MUST BE HELD TO 0.1875 INCH MINIMUM.

2. LOCATIONS OF SHIELD RINGS ARE APPROXIMATE AND SHOW ONLY A TYPICAL CASE.

3. JAM NUT RECEPTACLES WITH NO THREADS ON THE REAR OF THE CONNECTOR SHALL BE MOLDED SIMILAR TO THE MIL-C-5015 CONNECTORS.

4. ALL DIMENSIONS ARE IN INCHES. 1 INCH=25.4 MILLIMETERS.

5. TORQUE COUPLING NUT AND SHIELD NUT TO REQUIREMENTS OF 5.2.2.5 BEFORE POTTING AND MOLDING, ENSURE LOCKING TEETH ARE ENGAGED TO PREVENT ROTATION.

6. THE MOLDING SLEEVE FOR THE NEXT LARGER SHELL SIZE MAY BE USED WHEN THE PROPER SIZE IS NOT AVAILABLE.

Figure A-5. MIL-C-22992 Connectors (Sheet 1 of 3)

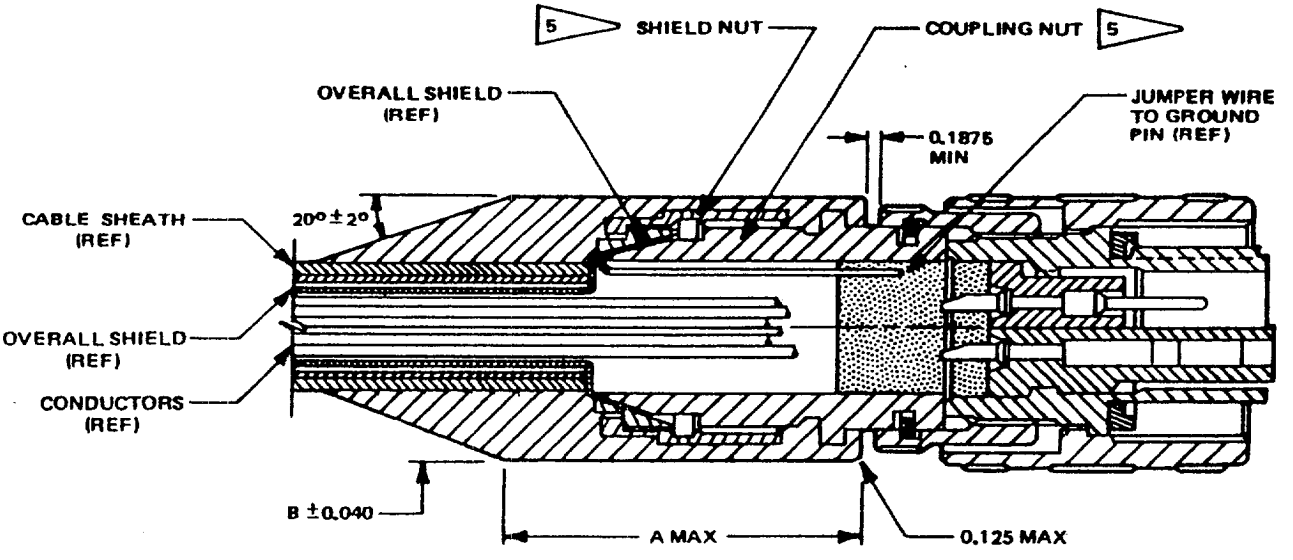

NOTE:
ALL DIMENSIONS ARE IN INCHES.
1 INCH =25.4 MILLIMETERS.

SERVICE CLASS L
360° SHIELD TERMINATION

Figure A-5. MIL-C-22992 Connectors (Sheet 2 of 3)

Service Class P or R				
Shell Size	A Dimension Unshielded	A Dimension 1 Shield Rings	A Dimension 2 Shield Rings	B Dimension
10	1.000	2.000	2.500	1.250
12	1.000	2.000	2.500	1.250
13	1.000	2.000	2.500	1.250
14	1.000	2.000	2.500	1.250
15	1.000	2.000	2.500	1.500
16	1.000	2.000	2.500	1.500
17	1.000	2.000	2.500	1.500
18	1.250	2.000	2.500	1.500
20	1.250	2.500	3.000	1.750
22	1.500	2.500	3.000	2.000
24	1.500	2.500	3.000	2.250
28	1.750	3.000	3.500	2.375
32	2.000	3.000	3.500	2.500
36	2.000	3.000	3.500	2.750
40	2.000	3.500	4.000	3.000
44	2.000	3.500	4.000	3.250

Service Class L			
Shell Size	A Dimension Unshielded	A Dimension Shielded	B Dimension
22	--	3.00	1.860
24	--	3.00	2.250
40	--	4.00	3.250

NOTE: ALL DIMENSIONS ARE IN INCHES. 1 INCH =25.4 MILLIMETERS.

Figure A-5. MIL-C-22992 Connectors (Sheet 3 of 3)

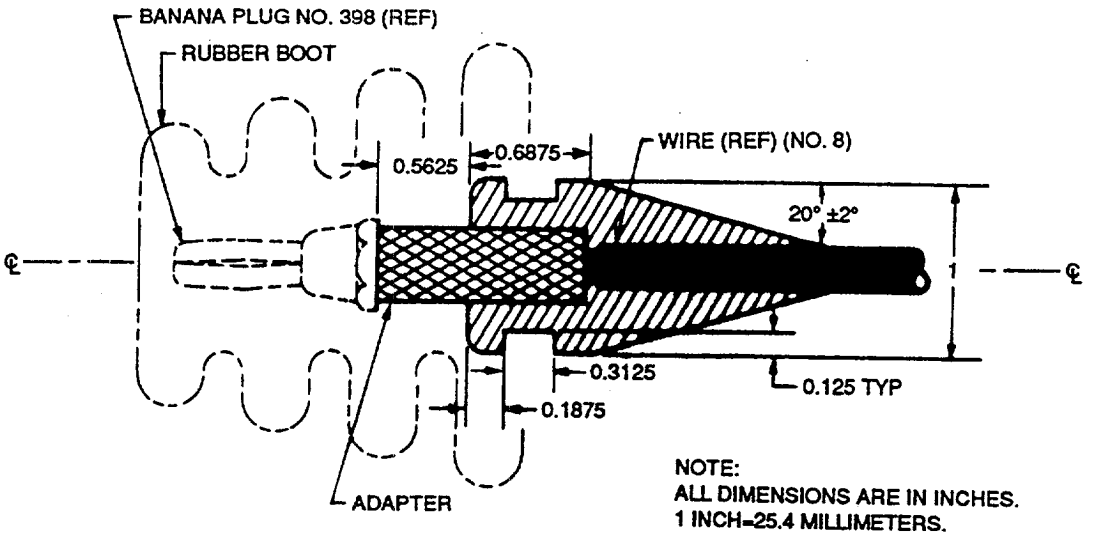

Figure A-6. Banana Plug (Configuration 1)

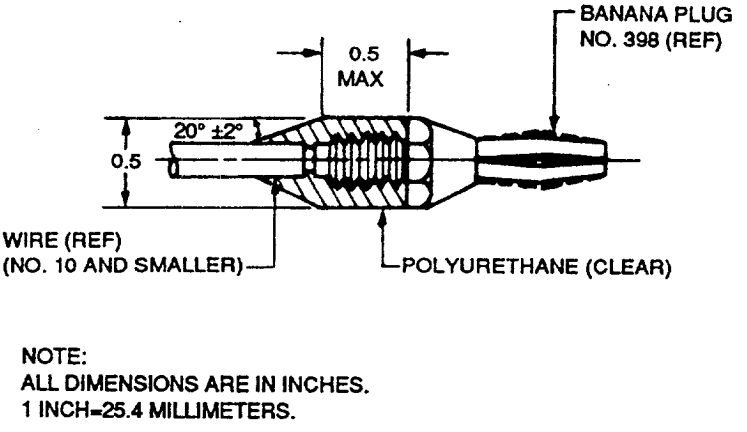

Figure A-7. Banana Plug (Configuration 2)

APPENDIX B

VENDOR INDEX

Vendor Index

Paragraph	Product Description	Brand Name/ Type	Company	Address	FSCM	Phone
4.1	Mold Release Compound	225 Mold Release	Lilly Industries, Inc.	210 E. Alondra Blvd. Gardena, Calif 90248	22401	213-321-0710
4.1	Mold Release Compound	MS-122 Fluorocarbon	Miller Sephenson Chemical Co., Inc.	P.O. B. 950, G. Washington Hwy; Danbery, Conn. 06810	18598	203-743-4447
4.1	Mold Release Compound	Krytox AR	Chemical and Pigments Dept., E.I. DuPont DeNemours and Co.	1007 Market Street Wilmington, Del. 19898	23037	800-441-9503
4.1	Sealant Material	Pro-Seal 766	Specialty Chemicals Div., Coast Pro-Seal and Manuf. Corp., Essex Chemical Corp.	19451 Susana Road Compton, Calif. 90221	83527	213-537-7600
4.3	Potting Injection Gun	-	Courtaulds Aerospace Application Support Center	5454 San Fernando Road Glendale, California 91203	92108	818-240-2060
4.3	Immersion Thermometer	11OC23OF	Eveready Thermometer Co.	288 LaCkawana West Patterson, NJ 07424	80011	800-453-7826
4.3	Abrasive Paper, no. 60 grit	Tri-m-mite Sanding Sheets	Automotive Trades Div, Minnesota Mining and Manuf. Co.	3M Center St. Paul, Minn. 55101	52157	800-742-9546
4.3	Metal Spatula	Series S-75245	Sargent-Welch Scientific	P.O. B. 1026, 7399 N. Linder Ave., Skokie, Ill. 60077	64484	312-267-5300
4.3	Metal Spatula	Series 208-496	Curtin Matheson Scientific, Inc.	P.O.B. 1546, 4220 Jefferson, Street Houston, Tex. 77001	15481	713-820-9898
4.3	Hot Plate	137-174	Sargent-Welch Scientific	P.O.B. 1026, 7300 N. Linder Ave., Skokie, Ill. 60077	15481	713-820-9898
5.2	Primer	Locquic Prime	Loctite Corp.	999 N. Mountain Road Newington, Conn. 06111	O5972	203-571-5100
5.2	Coating	Thread-Seize Compound	Loctite Corp.	999 N. Mountain Road Newington, Conn. 06111	O5972	203-571-5100
5.3	Disposable Wiper	Kimwipes, type XL	Kimberly-Clark Corp.	1400 Holcomb Bridge Road Roswell, Georgia 30076	33591	404-587-8000
5.4	Durometer	-	Shore Instrument and Manuf. Co.	90-35T Van Wyck Express-way Jamaica, N.Y. 11425	54693	516-379-3400
5.6	High-Speed Electric Tool	Moto Tool Model No. 275	Dremel Div.	4915 21st Street Racine, Wis. 53406	18531	516-379-1390
5.6	Cutter for Electric Tool	Cutter No. 192	Dremel Div.	4915 21st Street Racine, Wis. 53406	18531	516-379-1390

STANDARDIZATION DOCUMENT IMPROVEMENT PROPOSAL

INSTRUCTIONS

1. The preparing activity must complete blocks 1, 2, 3, and 8. In block 1, both the document number and revision letter should be given.
2. The submitter of this form must complete blocks 4, 5, 6, and 7.
3. The preparing activity must provide a reply within 30 days from receipt of the form.

NOTE: This form may not be used to request copies of documents, nor to request waivers or clarification of requirements on current contracts. Comments submitted on this form do not constitute or imply authorization to waive any portion of the referenced document or to amend contractual requirements.

I RECOMMEND A CHANGE:	1. DOCUMENT NUMBER KSC-STD-132C	2. DOCUMENT DATE June 12, 1997

3. DOCUMENT TITLE
Potting and Molding Electrical Cable Assembly Terminations, Standard for

4. NATURE OF CHANGE *(Identify paragraph number and include proposed rewrite, if possible. Attach extra sheets as needed.)*

5. REASON FOR RECOMMENDATION

6. SUBMITTER

a. NAME *(Last, First, Middle Initial)*	b. ORGANIZATION	
c. ADDRESS *(Include Zip Code)*	d. TELEPHONE *(Include Area Code)*	7. DATE SUBMITTED

8. PREPARING ACTIVITY

a. NAME	d. TELEPHONE *(Include Area Code)*
Director of Engineering Development	(407-867-2565

c. ADDRESS *(Include Zip Code)* National Aeronautics and Space Administration, Mail Code: LO
Kennedy Space Center, FL 32899

KSC FORM 21-610NS (2/94) (C/G 2/94)