METRIC/INCH-POUND

KSC-SPEC-Z-0006A
March 15, 1995
Supersedes
KSC-SPEC-Z-0006
June 21, 1968

INDUCTION BRAZING, AEROSPACE TUBING FITTINGS, SPECIFICATION FOR

ENGINEERING DEVELOPMENT DIRECTORATE

National Aeronautics and
Space Administration

John F. Kennedy Space Center

KSC FORM 16-12 (REV 7/92)

KSC-SPEC-Z-0006A
March 15, 1995
Supersedes
KSC-SPEC-Z-0006
June 21, 1968

INDUCTION BRAZING, AEROSPACE TUBING FITTINGS, SPECIFICATION FOR

Approved By:

Walter T. Murphy
Director of Engineering Development

JOHN F. KENNEDY SPACE CENTER, NASA

P2/WP60/SPECZ06A.DOC

TABLE OF CONTENTS

Section	Title	Page
1.	SCOPE	1
2.	APPLICABLE DOCUMENTS	1
2.1	Governmental	1
2.1.1	Specifications	1
2.1.2	Standards	2
2.2	Non-Governmental	2
3.	REQUIREMENTS	2
3.1	Materials	2
3.1.1	Tubing	2
3.1.2	Fittings	3
3.1.3	Brazing Alloy	3
3.1.4	Shielding Gas	3
3.2	Equipment	3
3.2.1	Brazing Machine	3
3.2.2	Tooling	3
3.2.3	Recorder	3
3.2.4	Transducer	4
3.2.5	Calibration	4
3.3	Fabrication	4
3.3.1	General	4
3.3.2	Tube Cutting	4
3.3.3	Tube-End Conditioning	4
3.3.4	Marking	4
3.3.5	Assembly	4
3.3.6	Gas Purge	4
3.3.7	Brazing Schedule	6
3.3.8	Brazing Operator	6
3.4	Nondestructive Testing	7
3.5	Reheating	7
3.6	Repair of Defective Joints	7

TABLE OF CONTENTS (cont)

Section	Title	Page
4.	QUALITY ASSURANCE PROVISIONS	7
4.1	Inspection Requirements	7
4.2	Test Procedures and Acceptance Criteria	7
4.2.1	Visual Inspection	7
4.2.1.1	Visual Inspection Acceptance Criteria	7
4.2.2	Radiographic Inspection	7
4.2.2.1	Radiographic Inspection Acceptance Criteria	8
4.3	Other Tests	8
4.4	Brazing Schedule Certification	8
4.5	Brazing Operator Qualification	8
4.6	Qualification of NDT Personnel	8
5.	PREPARATION FOR DELIVERY	14
6.	NOTES	14
6.1	Intended Use	14
6.2	Data Required on Drawings or in Procurement Documents	14

LIST OF FIGURES

Figure	Title	Page
1	Marking and Assembly	5
2	Critical Area	9
3	Radiographic Analysis of Brazed Joints	10

LIST OF TABLES

Table	Title	Page
1	Allowable Argon Impurities	3
2	Inert Gas Purge Cycle	6

INDUCTION BRAZING, AEROSPACE TUBING FITTINGS, SPECIFICATION FOR

1. SCOPE

This specification covers induction brazing, inspecting of brazed joints, qualification of brazing machine operators, and certification of brazing schedules for aerospace tubing fittings used in the fabrication of critical ground support systems.

This specification is for use in critical applications only. A brazed joint is critical where a failure of any portion would cause loss of system, loss of a major component, loss of control, unintentional release of critical stores, or hazard to personnel. Induction brazing is less preferable for use than other qualified processes such as automatic tube and pipe welding where applicable because of economic considerations. Therefore, automatic tube and pipe welding is to be used in preference to brazing whenever applicable.

2. APPLICABLE DOCUMENTS

The following documents form a part of this document to the extent specified herein. When this document is used for procurement, including solicitations, or is added to an existing contract, the specific revision levels, amendments, and approval dates of said documents shall be specified in an attachment to the Solicitation/Statement of Work/Contract.

2.1 Governmental.

2.1.1 Specifications.

Military

MIL-G-9954	Glass Beads: For Cleaning and Peening
MIL-A-18455	Argon, Technical
MIL-C-81302	Cleaning, Compound, Solvent, Trichlorotrifluoroethane

National Aeronautics and Space Administration

75M16467	Induction Brazing Equipment, Specification for

Federal

O-A-51	Acetone, Technical

2.1.2 Standards.

Military

MIL-STD-453	Inspection, Radiographic

(Copies of specifications, standards, drawings, and publications required by contractors in connection with specific procurement functions should be obtained from the procuring activity or as directed by the Contracting Officer.)

2.2 Non-Governmental.

American Welding Society

AWS A5.8-92	Specification for Filler Metals for Brazing and Braze Welding

(Application for copies should be addressed to the American Welding Society, Inc., 500 N.W. LeJeune Road, P.O. Box 351040, Miami, FL 33135.)

3. REQUIREMENTS

3.1 Materials. - All materials shall conform to the requirements of the engineering drawings and the procurement documents. Materials purchased in a specified clean condition shall be stored and handled by the brazing contractor in a manner such as to maintain the required cleanliness.

3.1.1 Tubing. - Diametral tolerance, including ovality, on the outside diameter shall be +0.08 -0.00 mm (+0.003 -0.000 inches) measured after conditioning per 3.3.3 and marking per 3.3.4. Tubing of stainless steel types 304L, 321, and 347 shall be considered satisfactory for brazing to this specification.

3.1.2 Fittings. - Fittings shall be as specified by the engineering drawings or procurement documents and shall be compatible with the brazing tools. Fittings shall be cleaned and packaged by the fitting manufacturer.

3.1.3 Brazing Alloy. - Brazing alloy shall conform to AWS A5.8-92 classification BAU-4 (82 percent gold, 18 percent nickel) or as specified on the engineering drawings.

3.1.4 Shielding Gas. - Argon, conforming to MIL-A-18455 and table 1, or from liquid source and conforming to table 1, shall be used for shielding and purging of the brazed joint.

3.2 Equipment.

3.2.1 Brazing Machine. - The brazing machine shall be of the high-frequency induction-heating type as specified in 75M16467. The machine shall be capable of producing production brazing in accordance with this specification. Successful certification of the required brazing schedules per 4.4 shall constitute qualification of the machine.

Table 1. Allowable Argon Impurities

Element	Allowable Impurities
Oxygen	Not more than 5 ppm *
Hydrogen	Not more than 1 ppm
Nitrogen	Not more than 7 ppm
Carbonaceous Gases	Not more than 1 ppm
Dew Point	Not higher than -67.8 °C (-90 °F)
* ppm = parts per million	

3.2.2 Tooling. - Brazing tools shall be compatible with the brazing machine and the fittings to be brazed.

3.2.3 Recorder. - The temperature recorder for use in determining brazing schedules shall be calibrated for use with a chromel-alumel thermocouple and shall record in degrees Celsius (°C) or degrees Fahrenheit (°F).

3.2.4 Transducer. - The transducer for use in determining brazing schedules shall consist of a typical brazed joint, of the material to be used in production brazing, in which a chromel-alumel thermocouple has been located approximately at the fitting-tube at a point 1.27 mm (0.050 inch) from the fitting end.

3.2.5 Calibration. - Measuring and test equipment shall have current calibration status.

3.3 Fabrication.

3.3.1 General. - No production brazing shall be performed under this specification prior to brazing schedule certification and operator qualification.

3.3.2 Tube Cutting. - Cutting shall be performed in a manner which will not distort the tube end beyond tolerances specified in 3.1.1 or contaminate the tube beyond cleanliness requirements specified on the drawings or in the procurement documents.

3.3.3 Tube-End Conditioning. - Prior to assembly with the fitting, tube ends shall be conditioned. (Peening with glass beads conforming to MIL-G-9954 is recommended.) The tube outside surface shall be conditioned for a minimum distance of 25 mm (1 inch) from the end. Clean teflon inserts shall be used to plug the tube and prevent contamination of the inner surface of the tube during conditioning. After conditioning, the tube end shall be wiped with a lint-free oil-free wiper wet with acetone per 0-A-51 or 1,1,2-trichloro-1,2,2-trifluoro-ethane per MIL-C-81302. Diametral tolerances per 3.1.1 shall be maintained.

3.3.4 Marking. - Tube ends shall have engagement-locating bands permanently marked as shown in figure 1 or as recommended by the fitting manufacturer. Depth of marking shall not exceed 0.008 mm (0.0003 inches). Internal cleanliness and cleanliness of the conditioned surface shall be maintained during the marking process. After marking, the tube ends shall be protected from contamination until ready for brazing.

3.3.5 Assembly. - Tube-to-fitting assembly shall conform to figure 1.

3.3.6 Gas Purge. - The assembled joint shall be purged with argon, per 3.1.4, prior to, during, and after applying heat. The prebraze purge time, flow rates, to postbraze purge time shall be as established by the brazing schedule. Typical time periods are shown in table 2.

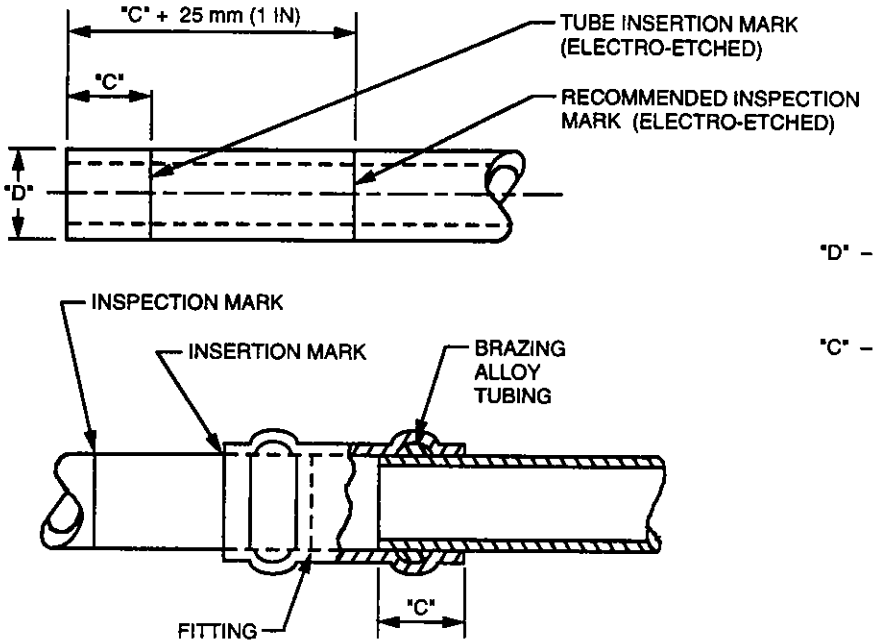

"D" – CONTROLLED DIAMETER NOM. +0.08/–0 00 mm (+0 003/–0 000 IN)

"C" – INSERTION DISTANCE

TUBE INSERTION LENGTH (C) – TOLERANCE ±0 8 mm (±0 03 IN)								
DASH SIZE	BURST PRESSURE RATING – MPa (PSI)							
	13 8 (2000)	27 6 (4000)	41 4 (6000)	55 2 (8000)	69 0 (10,000)	82 7 (12,000)	110 3 (16,000)	137 9 (20,000)
	11 4 (0 45)	11 4 (0 45)	11 4 (0 45)	11.4 (0 45)	11 4 (0 45)	11 4 (0 45)	11 4 (0 45)	11 4 (0 45)
–3								
–4								
–5								
–6								
–7								
–8								
–10								
–12							11 4 (0 45)	11.4 (0.45)
–16					11 4 (0 45)	11 4 (0 45)	12 7 (0 50)	12 7 (0 50)
–20					12 7 (0 50)	12 7 (0 50)		
–24			11 4 (0 45)	11.4 (0.45)				
–32	11 4 (0 45)	11 4 (0 45)	12 7 (0 50)	12.7 (0 50)				
–40	12.7 (0 50)	12 7 (0 50)	12 7 (0 50)	12.7 (0 50)				

DK/KSC-SPEC-Z-0006A/FIG 1

Figure 1. Marking and Assembly

Table 2. Inert Gas Purge Cycle

Purge Time (Seconds)			
Size		Minimum Prebraze	Minimum Postbraze
Millimeters	Inches		
10 and Under	3/8 and Under	30	90
13	1/2	50	120
16 and Over	5/8 and Over	90	300

3.3.7 Brazing Schedule. - A brazing schedule shall be provided by the brazing contractor for each fitting size. The equipment manufacturer's instructions for determining the brazing schedule shall be followed. Schedules must be qualified per 4.4 prior to use for production brazing. The brazing schedule shall define the following.

a. Fitting type, size, and burst pressure rating

b. Tube material, size, and wall thickness

c. Brazing tooling identification

d. Brazing alloy

e. Tube-end conditioning, cleaning, and marking (insertion depth)

f. Induction generator power setting

g. Brazing heat cycle

h. Working temperature

i. Inert-gas flow rate

j. Inert-gas purge cycle time.

3.3.8 Brazing Operator. - Prior to the start of production brazing, the brazing machine operator shall be qualified per 4.5.

3.4 Nondestructive Testing. - All brazed joints shall be subjected to radiographic examination per 4.2.2 and such other tests as may be specified on the engineering drawings or in the procurement documents.

3.5 Reheating. - If acceptable alloy flow per 4.2.1.1 is not achieved, the joint may be reheated one time.

3.6 Repair of Defective Joints. - Brazed joints not meeting the requirements of this specification shall be rejected. The brazing contractor shall submit a repair procedure to the procuring activity for approval. Approval of the repair procedure shall be obtained prior to any repair effort.

4. QUALITY ASSURANCE PROVISIONS

4.1 Inspection Requirements. - The brazing contractor is responsible for the performance of all inspection requirements as specified herein. Except as otherwise specified, the brazing contractor may utilize his own or any other inspection facilities and services acceptable to KSC. Inspection and test records shall be kept complete and, upon request, made available to the procuring activity or its designated representative. The procuring activity, or its designated representative, reserves the right to perform any or all of the inspections set forth in this specification to assure that each brazed joint conforms to the specified requirements.

4.2 Test Procedures and Acceptance Criteria.

4.2.1 Visual Inspection. - Each brazed joint shall be inspected visually for brazing alloy flow, melting of parent metal, discoloration, and scale.

4.2.1.1 Visual Inspection Acceptance Criteria. - Visible brazing alloy flow must exist around the entire circumference of the tube at the fitting end (Point "D," figure 2). Melting of the parent metal shall be cause for rejection. Surface oxide discoloration adjacent to the brazing alloy fillets is acceptable. Dark grey, black, or nonadhering scale shall be cause for rejection as evidence of excessive contamination.

4.2.2 Radiographic Inspection. - Radiographic inspection shall be performed in accordance with MIL-STD-453 on all brazed joints. Extra fine grain film (Kodak Type M or equivalent) shall be used. A minimum of two radiographs shall be made of each joint, the image planes being approximately 90 degrees apart. If this is not possible, the approval of the NASA Quality Representative, or designated representative thereof, shall be required for the procedure followed.

4.2.2.1 Radiographic Inspection Acceptance Criteria. - Any joint failing to meet the following requirements shall be rejected.

a. No single void shall exceed 10 percent of the critical area. (See figure 2.)

b. No void or combination of voids shall reduce the width of the critical area by more than 50 percent.

c. Total void area shall not exceed 30 percent of the critical area.

d. Salt and pepper voids [0.38 mm (0.015 inch) diameter or less] are not critical unless the total void area exceeds 30 percent of the critical area.

e. Recession of brazing alloy at tube end shall not exceed 0.38 mm (0.015 inch).

f. Alloy reservoir area is not subject to radiographic inspection.

g. Where critical area includes both sides of the reservoir area, each side shall be considered separately.

h. For clarification of requirements, see figure 3.

4.3 Other Tests. - Other tests, destructive or nondestructive, shall be performed as required by the engineering drawings or the procurement documents.

4.4 Brazing Schedule Certification. - One sample fitting shall be brazed, following the proposed brazing schedule, and subjected to the inspection and tests required for production brazing. Acceptance of the sample braze shall constitute certification of the brazing schedule. A change in any one of the essential variables in 3.3.7, other than material, will require recertification.

4.5 Brazing Operator Qualification. - The brazing contractor shall certify the competency of brazing operators based on experience and performance of acceptable brazing. Operator certification is subject to the approval of the NASA Quality Representative or designated representative thereof.

4.6 Qualification of NDT Personnel. - All personnel performing NDT or interpreting NDT results shall be certified in accordance with ASNT CP-189. An individual performing NDT shall be a qualified level II or level III individual for the NDT method used, or a qualified level I individual for the NDT method used

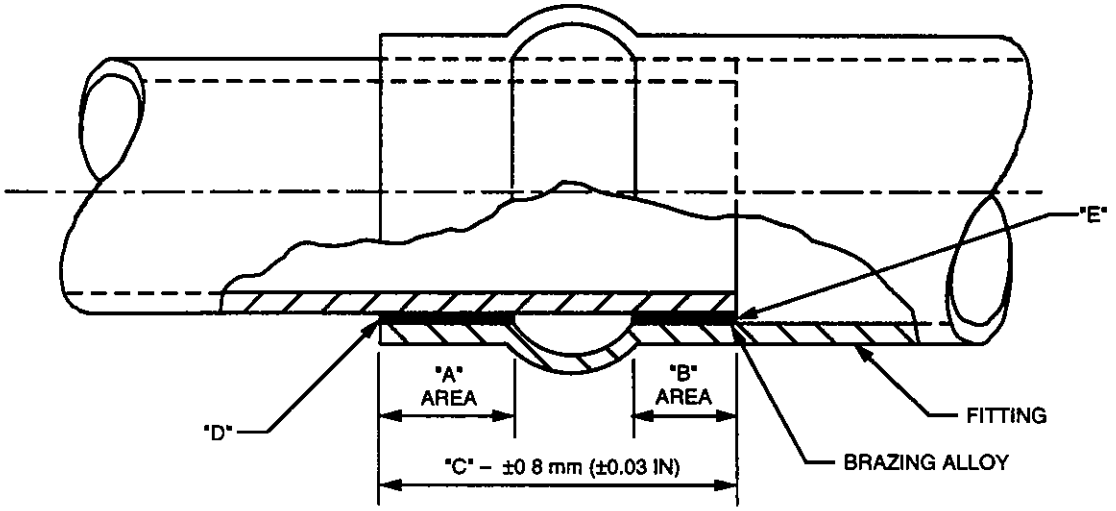

CRITICAL JOINT AREA FOR BAu–4 BRAZING ALLOY								
DASH SIZE	BURST PRESSURE RATING [MPa (PSI)] AND CODE							
	CODE 5	CODE 6	CODE 1	CODE 7	CODE 8	CODE 2	CODE 3	CODE 4
	13 8 (2000)	27 6 (4000)	41 4 (6000)	55 2 (8000)	69 0 (10,000)	82 7 (12,000)	110 3 (16,000)	137.9 (20,000)
	B ONLY	B ONLY	B ONLY	B ONLY	B ONLY	B ONLY	B ONLY	B ONLY
–3								
–4								
–5								
–6								
–7								
–8								
–10								B ONLY
–12							B ONLY	A + B
–16						B ONLY	A + B	A + B
–20					B ONLY	A + B		
–24				B ONLY				
–32			B ONLY	A + B				
–40	B ONLY	B ONLY	A + B	A + B				

DK/KSC-SPEC-Z-0006A/FIG 2

Figure 2. Critical Area

(A) SUPERIMPOSED JOINT AREAS

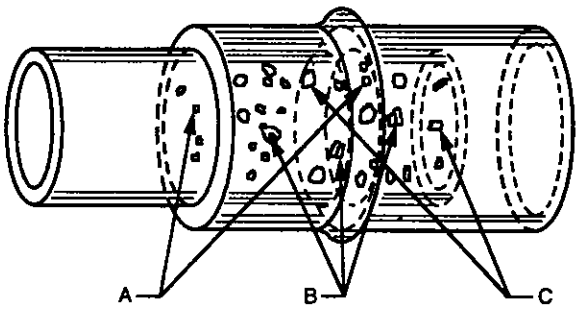

A – "BACK" SIDE ONLY

B – "FRONT" SIDE ONLY

C – "FRONT" AND "BACK" SIDES SUPERIMPOSED

TWO VOIDS, ONE IN "BACK" SIDE AND ONE IN "FRONT" SIDE, SUPERIMPOSED

(B) INSPECTABLE JOINT AREA (OR ARC)

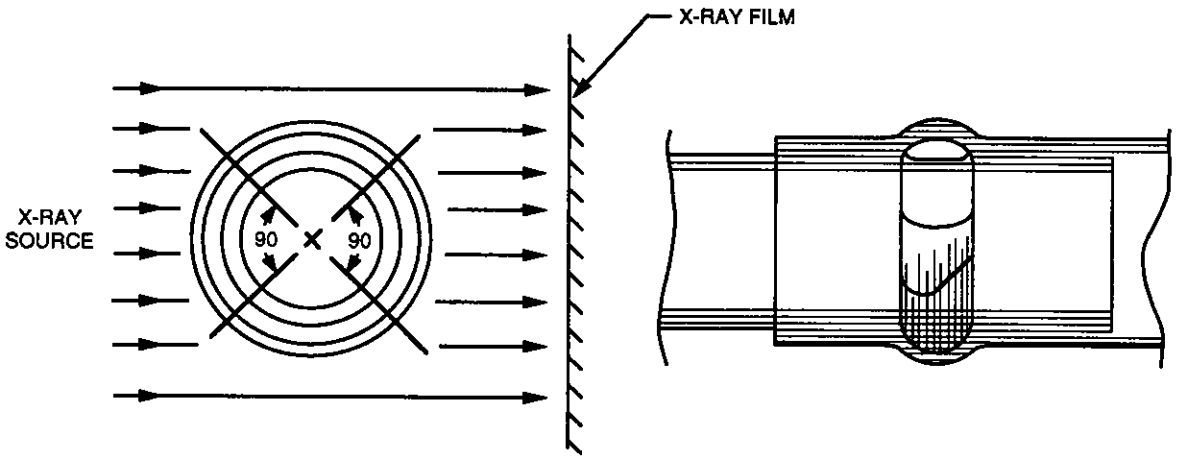

THE INSPECTABLE AREA ON THE X-RAY FILM INCLUDES AN ANGLE OF APPROX 90 DEGREES OF BOTH "FRONT" AND "BACK" OF JOINT. TO INSPECT ENTIRE JOINT AREA THE SECOND X-RAY MUST BE TAKEN 90 ±5 DEGREES FROM THE FIRST X-RAY

DK/KSC-SPEC-Z-0006A/FIG 3_1

Figure 3. Radiographic Analysis of Brazed Joints (Sheet 1 of 4)

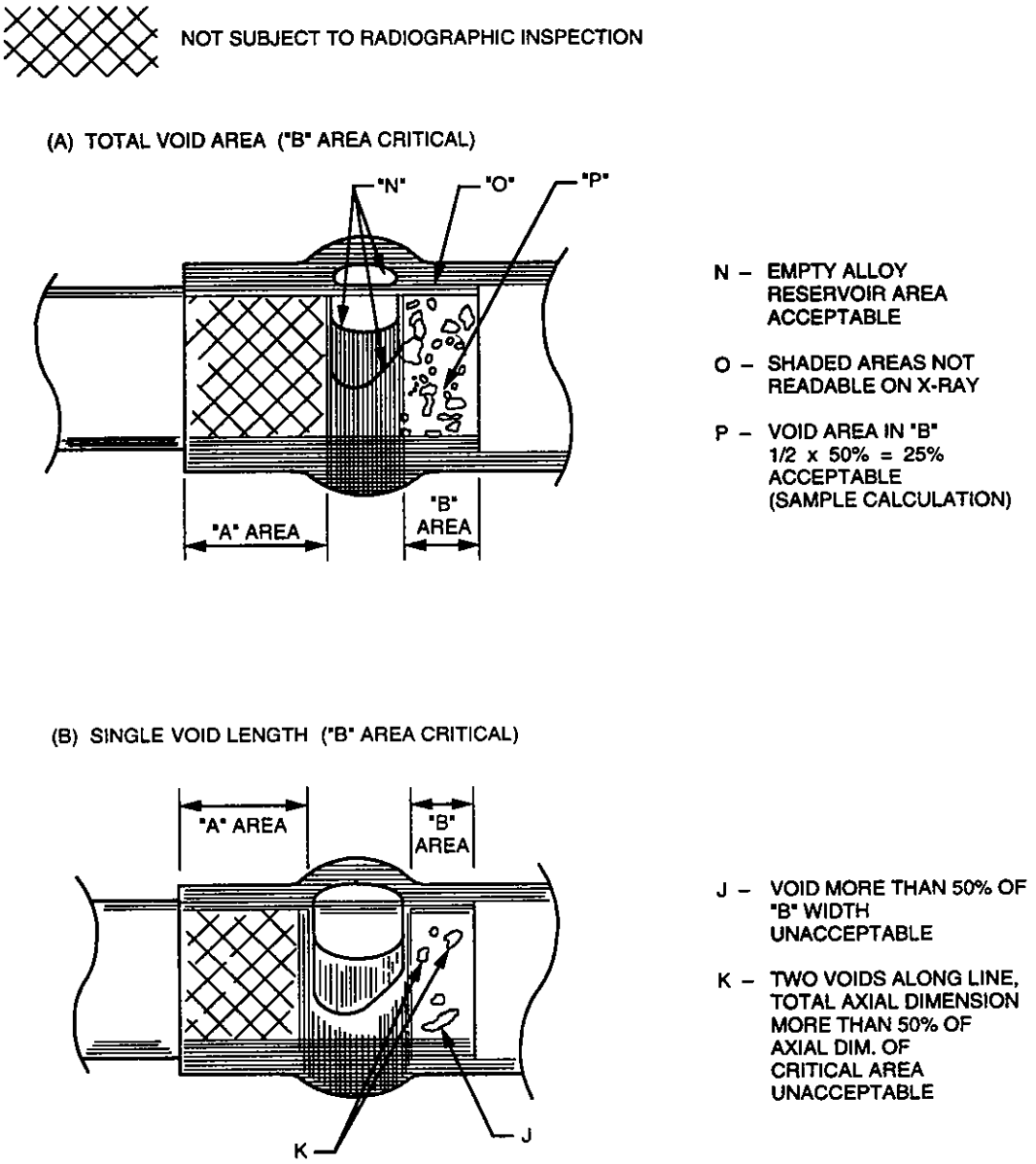

DK/KSC-SPEC-Z-0006A/FIG 3_2

Figure 3. Radiographic Analysis of Brazed Joints (Sheet 2 of 4)

(C) SINGLE VOID AREA ("B" AREAS CRITICAL)

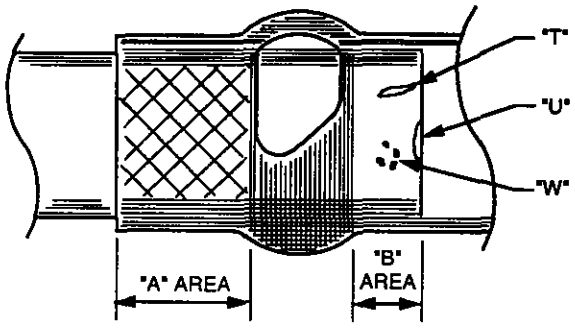

T – VOID TOO LONG AND OPEN TO INTERNAL FILLET UNACCEPTABLE

U – VOID OPEN TO FILLET UNACCEPTABLE

W – SALT AND PEPPER ACCEPTABLE

(A) TOTAL VOID AREA ("A" AND "B" AREAS CRITICAL)

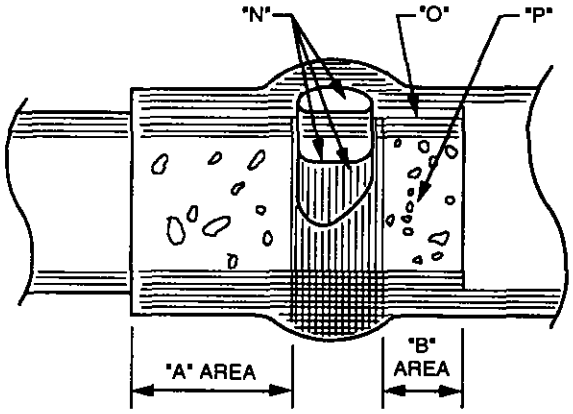

N – EMPTY ALLOY RESERVOIR AREA ACCEPTABLE

O – SHADED AREAS NOT READABLE ON X-RAY

P – VOID AREA IN "B" 1/2 x 50% = 25% ACCEPTABLE (SAMPLE CALCULATION)

DK/KSC-SPEC-Z-0006A/FIG 3_3

Figure 3. Radiographic Analysis of Brazed Joints (Sheet 3 of 4)

(B) SINGLE VOID LENGTH ("A" AND "B" AREAS CRITICAL)

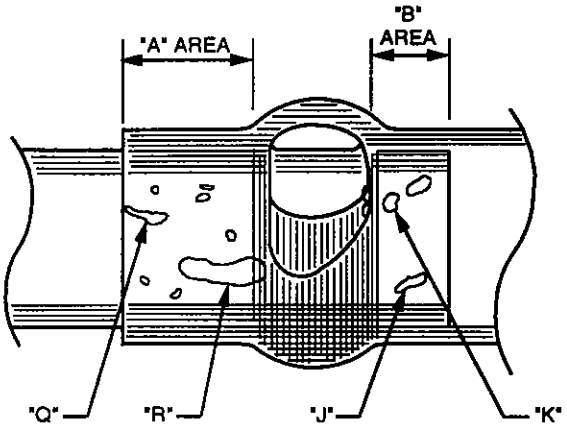

Q – VOID LESS THAN 50% ACROSS "A" ACCEPTABLE; VOID OPEN TO FILLET UNACCEPTABLE, VOID MORE THAN 50% OF "A" WIDTH UNACCEPTABLE

R – VOID OPEN TO BEAD CAVITY ACCEPTABLE

J – VOID MORE THAN 50% OF "B" WIDTH UNACCEPTABLE

K – TWO VOIDS ALONG LINE, TOTAL AXIAL DIMENSION MORE THAN 50% OF AXIAL DIM OF CRITICAL AREA UNACCEPTABLE

(C) SINGLE VOID SIZE ("A" AND "B" AREAS CRITICAL)

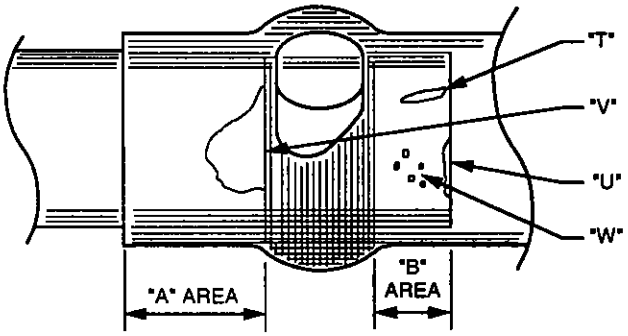

T – VOID MORE THAN 50% OF "B" WIDTH AND OPEN TO INTERNAL FILLET UNACCEPTABLE

U – OPEN FILLET VOID UNACCEPTABLE

V – SINGLE VOID EQUAL TO MORE THAN 10% OF "A" AREA UNACCEPTABLE

W – SALT AND PEPPER ACCEPTABLE

DK/KSC-SPEC-Z-0006A/FIG 3_4

Figure 3. Radiographic Analysis of Brazed Joints (Sheet 4 of 4)

if under the direct supervision of one of the previously described level II or level III individuals. All qualification levels are as defined by ASNT CP-189. Interpretation of NDT results shall be performed by a qualified level II or level III individual for the NDT method used. NDT personnel certification records shall be made available to the procuring agency.

5. PREPARATION FOR DELIVERY

Not applicable.

6. NOTES

6.1 Intended Use. - This specification is intended for use by personnel performing induction brazing of aerospace tubing fittings used in the fabrication of critical ground support systems.

6.2 Data Required on Drawings or in Procurement Documents.

a. Title, number, and date of this specification

b. Material requirements

c. Other tests (when required)

d. Preparation for delivery (when required)

e. Cleanliness requirements.

NOTICE: When Government drawings, specifications, or other data are used for any purpose other than in connection with a definitely related Government procurement operation, the United States Government thereby incurs no responsibility nor any obligation whatsoever; and the fact that the Government may have formulated, furnished, or in any way supplied the said drawings, specifications, or other data is not to be regarded, by implication or otherwise as in any manner licensing the holder or any other person or corporation, or conveying any right or permission to manufacture, use, or sell any patented invention that may in any way be related thereto.

Custodian:	Preparing Activity:
NASA - John F. Kennedy Space Center	John F. Kennedy Space Center Mechanical Engineering Division Engineering Development Directorate

STANDARDIZATION DOCUMENT IMPROVEMENT PROPOSAL

INSTRUCTIONS

1. The preparing activity must complete blocks 1, 2, 3, and 8. In block 1, both the document number and revision letter should be given.
2. The submitter of this form must complete blocks 4, 5, 6, and 7.
3. The preparing activity must provide a reply within 30 days from receipt of the form.

NOTE: This form may not be used to request copies of documents, nor to request waivers or clarification of requirements on current contracts. Comments submitted on this form do not constitute or imply authorization to waive any portion of the referenced document or to amend contractual requirements.

I RECOMMEND A CHANGE:	1 DOCUMENT NUMBER KSC-SPEC-Z-0006 Rev. A	2 DOCUMENT DATE March 15, 1995

3 DOCUMENT TITLE
Induction Brazing, Aerospace Tubing Fittings, Specification For

4 NATURE OF CHANGE *(Identify paragraph number and include proposed rewrite, if possible Attach extra sheets as needed)*

5 REASON FOR RECOMMENDATION

6. SUBMITTER

a NAME *(Last, First, Middle Initial)*	b ORGANIZATION	
c. ADDRESS *(Include Zip Code)*	d TELEPHONE *(Include Area Code)*	7. DATE SUBMITTED

8. PREPARING ACTIVITY

a NAME	d TELEPHONE *(Include Area Code)*
Director of Engineering Development	(407) 867-2565

c. ADDRESS *(Include Zip Code)* National Aeronautics and Space Administration, Mail Code: DE
Kennedy Space Center, FL 32899

KSC FORM 21-610NS (2/94) (C/G 2/94)