KSC-SPEC-E-0029
April 21, 1972

JOHN F. KENNEDY SPACE CENTER, NASA

COMPOUND, POTTING AND MOLDING, ELASTOMERIC, SPECIFICATION FOR

Design Engineering Directorate
Approved:

D. D. Buchanan
Associate Director for Design

MAY 5

00A

JOHN F. KENNEDY SPACE CENTER, NASA

COMPOUND, POTTING AND MOLDING, ELASTOMERIC,

SPECIFICATION FOR

1. SCOPE.

1.1 Scope. - This specification establishes the requirements for a high-temperature-resistant, flexible, elastomeric, potting and molding compound suitable for encapsulating connectors and components.

1.2 Classification. - The elastomeric potting and molding compounds described herein shall be of the following types:

Type I - Hardness rating 45 to 60 Shore A.
Type II - Hardness rating 61 to 75 Shore A.
Type III - Hardness rating 76 to 99 Shore A.
Type III A - Same as Type III, except for tensile strength (see Table I).

1.3 Abbreviations. - Abbreviations and unit symbols are listed in 6.1.

2. APPLICABLE DOCUMENTS.

2.1 Applicable Documents. - The following documents form a part of this specification to the extent specified herein. Unless otherwise indicated, the issue in effect on date of invitation for bids or request for proposals shall apply. When requirements of this specification and the requirements of any applicable document conflict, the requirements of this specification shall take precedence.

SPECIFICATIONS

Federal

TT-M-261	Methyl-Ethyl-Ketone (for Use in Organic Coatings)

Military

MIL-R-3065	Rubber, Fabricated Parts

MIL-I-7444	Insulation Sleeving, Electrical, Flexible
MIL-STD-129	Marking for Shipment and Storage
MIL-STD-810	Environmental Test Methods

PUBLICATIONS

American Society for Testing and Materials (ASTM)

ASTM D 149	Test for Dielectric Breakdown Voltage and Dielectric Strength of Electrical Insulating Materials at Commercial Power Frequencies
ASTM D 150	Test for AC Loss Characteristics and Dielectric Constant (Permittivity) of Solid Electrical Insulating Materials
ASTM D 257	Test for DC Resistance or Conductance of Insulating Materials
ASTM D 395	Test for Compression Set of Vulcanized Rubber
ASTM D 412	Tension Testing of Vulcanized Rubber
ASTM D 429	Test for Adhesion of Vulcanized Rubber to Metal
ASTM D 495	Test for High-Voltage, Low-Current Arc Resistance of Solid Electrical Insulating Materials
ASTM D 568	Test for Flammability of Plastics 0.127 cm (0.050 in.) and Under in Thickness
ASTM D 624	Test for Tear Resistance of Vulcanized Rubber

ASTM D 696	Test for Coefficient of Linear Thermal Expansion of Plastics
ASTM D 792	Test for Specific Gravity and Density of Plastics by Displacement
ASTM D 2240	Test for Indentation Hardness of Rubber and Plastics by Means of a Durometer
ASTM D 2393	Test for Viscosity of Epoxy Compounds and Related Components

(Application for copies should be addressed to the American Society for Testing and Materials, 1916 Race Street, Philadelphia, Pennsylvania 19103.)

(Copies of specifications, standards, drawings, and publications required by contractors in connection with specific procurement functions should be obtained from the procuring activity or as directed by the Contracting Officer.)

3. REQUIREMENTS.

3.1 Qualification. - The compounds furnished under this specification shall be products that have been tested, have passed the qualification tests specified herein, and have been listed on or approved for listing on the applicable KSC-Approved Products List at the time set for opening of bids.

3.2 Samples.

3.2.1 Qualification Sample. - The qualification sample shall meet all requirements of this specification.

3.2.2 Quality Assurance Sample. - The quality-assurance sample, when required (see 6.3), shall meet all requirements of this specification.

3.2.3 Acceptance. - The acceptance sample shall be capable of meeting all requirements of this specification.

3.3 Materials. - The compound covered by this specification shall be transparent (unless otherwise specified) and shall be formulated from a chemically curing, noncorrosive, synthetic, elastomeric compound and such other ingredients necessary to produce a product of high quality suitable for the purpose intended. The compound shall be supplied in two-part kits except where premixed, degassed, and frozen cartridges are specifically called for. The compound may be supplied as a three-part kit when the addition of a color pigment is specified.

NOTE

The use of a primer to improve the adhesion of the molding compound to the base structure is permitted. The primer shall be from the same manufacturer as the molding compound with which it is used and shall be applied in strict accordance with the manufacturer's recommendations. The primers shall not degrade the physical and electrical properties of the compounds.

3.3.1 Toxicity. - The compound shall contain no benzene, chlorinated solvents, or other highly toxic materials, either initially or as a product of the curing reaction.

3.3.2 Nonvolatile Content. - The minimum nonvolatile content of the compound shall be 99 percent by weight when tested as specified in 4.9.2.7.

3.3.3 Color Additives. - If color additives are specified, the electrical and physical properties shall not be reduced below the requirements of this specification.

3.4 Performance and Product Characteristics.

3.4.1 Appearance. - The liquid mixed compound shall be homogeneous and free from lumps and coarse particles preparatory to molding or potting when examined as specified in 4.9.4. A skin is permissible on the base compound of two-part kits, but the skin shall be removed and discarded before mixing. There shall be no separation of pigment that cannot be readily dispersed.

3.4.2 Application. - The molding compound shall be capable of being readily applied by an injection or extrusion gun when tested as specified in 4.9.5.2.

3.4.3 Application Life. - The compound shall be suitable for application for a minimum of 60 minutes after a two-part kit has been mixed or a frozen cartridge has thawed, when tested as specified in 4.9.5.1 and 4.9.5.2.

3.4.4 Curing Time. - Cure shall be in accordance with the manufacturer's instructions, except that the curing time of the compound shall not exceed seven days at 24 $\pm$ 2°C (75.2 $\pm$ 3.6°F), or 16 hours at 82 $\pm$ 2°C (179.6 $\pm$ 3.6°F) when tested as specified in 4.9.3.4.

3.4.5 Storage Life. - The two-part compounds shall be capable of meeting the requirements of this specification for a minimum of six months when stored at less than 27°C (80.6°F) when tested as specified in 4.9.6.1. The premixed compound shall be capable of meeting the requirements of this specification when stored at minus 29 $\pm$ 2°C (-20.2 $\pm$ 3.6°F) for seven days after receipt when tested as specified in 4.9.6.2.

3.4.6 Low-Temperature Flexibility. - The compound shall not crack or separate from the test specimen when subjected to a temperature of minus 55 ± 1°C (-67 ± 1.8°F) for a minimum of four hours, when tested as specified in 4.9.7.

3.4.7 Fungus Resistance. - The compound shall not support fungus growth when tested as specified in 4.9.8.

3.4.8 Weight Loss. - The weight loss in a vacuum of 1×10^{-7} torr and during temperature elevation shall not exceed 0.20 percent/cm^2/hr. During steady-state conditions the weight loss shall not exceed 0.04 percent/cm^2/hr when tested as specified in 4.9.9.

3.4.9 Ozone Resistance. - The compound shall show no evidence of cracking when exposed for seven days to an ozone concentration of 50 ± 3 parts of ozone per 100 million parts of air at 38 ± 1°C (100.4 ± 1.8°F) when tested as specified in 4.9.10.

3.5 Physical and Electrical Properties. - The compound shall meet the requirements specified in Table I when tested in accordance with the applicable test methods of Section 4.

3.6 Product Marking. - The compound shall be marked as specified in 5.3.

4. QUALITY-ASSURANCE PROVISIONS.

4.1 Responsibility for Inspection. - Unless otherwise specified in the contract or the purchase order (see 6.3), the supplier is responsible, at his own expense, for the performance of all tests and inspection requirements as specified herein. Except as otherwise specified, the supplier may utilize his own facility or any commercial laboratory acceptable to KSC. The procuring activity or its designated representative reserves the right to perform any or all of the inspections set forth in the specification where such inspections are deemed necessary to assure supplies and services conform to prescribed requirements.

4.2 Test Data. - The supplier shall establish and maintain records of all test data that is to be used to verify that the material conforms to the requirements of this specification. The test data shall be documented and submitted to KSC with request for qualification as specified in 4.4.1.

4.3 Certification of Test Data. - The validity of all test data shall be certified, in writing, by the laboratory at which the tests were conducted. All laboratories performing tests required by this specification shall be approved by the qualifying activity (see 4.8) or its designated representative prior to submittal of compounds for qualification.

Table I. Physical and Electrical Properties

PROPERTY	TYPE I	TYPE II	TYPE III & IIIA
Electrical:			
Dielectric constant (max)	5.0	5.0	5.0
Dissipation factor (max)	0.09	0.09	0.09
Dielectric strength (50 mils sample, min)	500V/mil	500V/mil	500V/mil
Volume resistivity (min):			
@ ambient conditions	1×10^{12} ohms-cm	1×10^{12} ohms-cm	1×10^{12} ohms-cm
@ 100°C (212°F)	1×10^{9} ohms-cm	1×10^{9} ohms-cm	1×10^{9} ohms-cm
Surface resistivity, min	1×10^{12} ohms	1×10^{12} ohms	1×10^{12} ohms
Arc resistance, min	45s	45s	45s
Insulation resistance, min:			
@ ambient condition	1×10^{11} ohms	1×10^{11} ohms	1×10^{11} ohms
@ 100°C (212°F)	7.5×10^{8} ohms	7.5×10^{8} ohms	7.5×10^{8} ohms
After moisture conditioning	2.0×10^{8} ohms	2.0×10^{8} ohms	2.0×10^{8} ohms
High potential resistance (60 Hz minute)	No breakdown	No breakdown	No breakdown

Table I. Physical and Electrical Properties (Contd.)

PROPERTY	TYPE I	TYPE II	TYPE III & IIIA
Mechanical:			
Tear strength, min	100 lb/in	150 lb/in	250 lb/in
Tensile strength, min	1000 lbs/in^2	1500 lb/in^2	2500 lb/in^2, Type III 2000 lb/in^2, Type IIIA
Elongation, min	500 percent	400 percent	300 percent
Shrinkage, max	3 percent	3 percent	3 percent
Hardness (after full cure)	45 to 60 Shore A	61 to 75 Shore A	76 to 99 Shore A
Hardness (hydrolytic stability test)	30 Shore A min	30 Shore A min	30 Shore A min
Compression set, max	35 percent	35 percent	35 percent
Viscosity @ 24°C (75.2^{o}F) (freshly mixed from 2-part kits)	100 to 300 P	100 to 300 P	100 to 300 P
Viscosity @ 24°C (75.2^{o}F) (freshly thawed when premixed and frozen)	100 to 450 P	100 to 450 P	100 to 450 P
Adhesion bond strength (metal), min	15 lb/in	15 lb/in	15 lb/in
Adhesion bond strength (PVC), min	15 lb/in	15 lb/in	15 lb/in
Adhesion bond strength (neoprene), min	15 lb/in	15 lb/in	15 lb/in
Specific gravity, max	1.1	1.1	1.1
Flammability	self-extinguishing	self-extinguishing	self-extinguishing
Coefficient of linear thermal expansion, max	200 x 10^{-6} cm/cm/^{o}C	200 x 10^{-6} cm/cm/^{o}C	200 x 10^{-6} cm/cm/^{o}C

4.4 Qualification.

4.4.1 General. - Requests for qualification shall be directed to the qualifying activity (see 4.8). All requests shall be accompanied by a complete test report of properties of elastomeric compounds conforming to this specification. Once requests are submitted for qualification, the manufacturer may not change the raw materials or manufacturing methods without written approval of the qualifying activity. Where test results are submitted for more than one sample, the test reports shall reflect the results of each test by individual specimen as well as the average for all individual test results. In order for the proposed material to be considered for qualification, the test reports shall indicate that the specimens tested met all requirements of this specification.

4.4.2 Qualification Sample. - The qualification sample shall consist of at least ten 567-gram (20-ounce) kits or twenty-four 170.1-gram (6-ounce) premixed frozen cartridges selected at random from a production lot (see 4.7) and representative of the identical material and manufacturing processes used in production.

4.4.3 Qualification Tests. - The qualification tests shall consist of all the tests and examinations specified herein.

4.4.4 Qualification Rejection. - If any specimen of the qualification sample fails to meet the requirements of any inspection or test specified herein, the qualification sample and the entire production lot (see 4.7) that it represents shall be rejected. Before the manufacturer can be reconsidered for qualification, a complete report of the failure-causing defect(s) and the steps that have been taken to prevent the recurrence of the defect(s) shall be submitted to the qualifying activity. A reworked qualification sample shall not be submitted.

4.5 Quality Assurance.

4.5.1 Quality-Assurance Sample. - The quality-assurance sample, when required (see 6.2), shall be selected at random from the production lot (see 4.7) submitted for acceptance. The sample shall consist of at least ten 567-gram (20-ounce) kits or twenty-four 170.1-gram (6-ounce) premixed frozen cartridges.

4.5.2 Quality-Assurance Tests. - Unless otherwise specified by the procuring activity, the quality assurance sample shall be subjected to all examinations and tests specified herein.

4.5.3 Quality-Assurance Sample Rejection. - If any specimen of the quality-assurance sample fails any inspection specified herein, the entire lot represented by the sample shall be rejected. Before the rejected lot can be resubmitted for acceptance, a detailed report covering the rejection and the action taken to prevent recurrence of the defect-causing failure(s) shall be forwarded to the procuring activity. The defect-causing failure(s) and the

corrective action taken will be the basis for permitting resubmittal. Any reworked lot must be accompanied by a detailed report concerning the previous rejection and corrective action taken.

4.6 Acceptance.

4.6.1 Acceptance Sample. - Unless otherwise specified by the procuring activity, the sample for acceptance inspection shall consist of all the elastomeric compound submitted for acceptance at one time. For testing purposes, one two-part kit (or one frozen cartridge) of each type of material shall be selected at random from the sample submitted for acceptance.

4.6.2 Acceptance Inspection. - Unless otherwise specified by the procuring activity (see 6.2), an acceptance inspection shall be performed on all compounds submitted for acceptance at any one time. The acceptance inspection shall consist of the examinations of 4.9.4 and the following tests: application life (4.9.5), volume shrinkage (4.9.20), hardness (4.9.21), specific gravity (4.9.24), and nonvolatile content (4.9.27).

4.6.3 Acceptance-Inspection Rejection. - If the acceptance sample fails any acceptance-inspection test or examination, the entire sample shall be rejected. Rejected samples may be resubmitted at the discretion of the procuring activity, after corrective action has been taken. The number and type of defects shall be the basis for permitting resubmittal. Any reworked sample shall be accompanied by a detailed report concerning the previous rejection and corrective action taken.

4.7 Production Lot (Batch). - A production lot (batch) shall consist of that quantity of material formulated at the same time, under the same manufacturing conditions, of the same materials, and by the same manufacturer.

4.8 Qualifying Activity. - The qualifying activity for this specification is KSC. All information pertaining to control, test data, reports, and requests for qualification required by this specification shall be submitted to the following address:

DESIGN ENGINEERING, DD-EDD
NASA/KENNEDY SPACE CENTER
KENNEDY SPACE CENTER, FLORIDA 32899

4.9 Test Procedures.

4.9.1 Standard Conditions. - Standard conditions for the purpose of this specification are defined as 24 ± 2°C (75.2 ± 3.6°F) and 50 ± 5 percent relative humidity. Unless otherwise specified, all tests shall be conducted at standard conditions.

4.9.2 Test Specimens. - The specific number of specimens stated for each test shall be prepared from each type of compound to be tested. The compound shall be prepared in accordance with 4.9.3 and all specimens shall be subjected to the applicable tests. The specimens subjected to the tests described herein, except unprepared compounds subjected to examinations of 4.9.4, shall be considered unserviceable but shall be retained for one year for examination by the procuring activity if requested.

4.9.2.1. Pretest Conditioning. - Unless otherwise specified, all specimens shall be stabilized at standard conditions (see 4.9.1) for 48 hours prior to being tested.

4.9.3 Compound Preparation.

4.9.3.1 Thawing Conditions. - The premixed frozen cartridges of elastomeric compound shall be thawed for 30 ± 2 minutes at 49 ± 1°C (120.2 ± 1.8°F) when taken from a storage temperature of minus 29°C (-20.2°F) prior to testing.

4.9.3.2 Mixing and Degassing. - When the compound is supplied in two parts, the curing agent may partially crystallize. It is permissible to warm the curing agent in accordance with the manufacturer's recommendation, except that the temperature shall not exceed 90 ± 2°C (194 ± 3.6°F) and the curing agent shall not require more than 60 minutes to completely liquify. The curing agent shall become smooth and uniform without any crystallization or graininess when returned to 24°C (75.2°F) after heating. Place the curing agent and the base compound in a clean, dry, nonporous container having approximately four times the volume of the material. Mix the curing agent and the base compound thoroughly and degas at a pressure of less than 5 mmHg. The material may be agitated or vibrated during degassing to break foam. Degas until foaming subsides, but not longer than 20 minutes for an 0.47412-liter (1-pint) quantity. Exceeding the 20-minute time span will be cause for rejection.

4.9.3.3 Mold. - Unless otherwise specified, the specimen mold shall consist of any suitable material to which the compound will not adhere.

4.9.3.4 Curing Time. - Before testing, each molded specimen shall be cured in accordance with the time requirements of 3.4.4 and as recommended by the manufacturer applicable for that particular type of compound. To conform to 3.4.3, cure time shall not exceed seven days at 24 ± 2°C (75.2 ± 3.6°F) or 16 hours at 82 ± 2°C (179.6 ± 3.6°F).

4.9.4 Examinations. - The compound shall be examined visually to determine conformance to 3.4.1, 3.6, and section 5; however, examination to determine conformance to 3.4.1 shall be determined only on the compound selected from production lots (batches) or acceptance samples for testing.

4.9.5 Application Life and Viscosity.

4.9.5.1 Two-Part Compound. - The application life and viscosity of compound mixed from two-part kits shall be determined on a 250-gram (8.8175 ounce) sample of mixed compound (see 4.9.3.2) in accordance with ASTM D 2393, except as otherwise specified herein. The application life shall commence at the end of the mixing period. The spindle shall not be drawn from the material during the test. Readings shall be taken when the pointer on the viscosimeter dial first assumes a steady position, after a minimum of three revolutions, to determine conformance to 3.5 (viscosity). Consistency shall be determined at the end of a 50-minute period. Supplemental readings shall be made at 10-minute intervals until a reading of 1000 P is attained. This shall be considered the end of the application-life test.

4.9.5.2 Premixed, Frozen Compound. - A 170.1-gram (6-fluid ounce) compound cartridge, thawed in accordance with 4.9.3.1 shall be equipped with a calking gun having a 10.16 cm-long (4-inch long) nozzle with a 0.317 ± 0.012 cm (0.125 ± 0.005-inch) orifice. The gun and compound shall be maintained at a standard condition throughout the test. The gun shall be attached to a constant air supply of 5.2731 ± 0.3515 Kg/cm^2 (75 ± 5 lb/in^2). From 5.08 to 7.62 cm (2 to 3 inches) of compound shall be extruded initially to fill the nozzle and clear any entrapped air. The remaining compound shall be extruded into a suitable container to determine conformance to 3.4.1 and 3.4.2. The application life and viscosity shall then be determined as specified in 4.9.5.1.

4.9.6 Storage Life.

4.9.6.1 Two-Part Kits. - The two-part compound shall be capable of passing all examinations and tests specified herein after being stored for six months at 25 ± 2°C (77 ± 3.6°F) to conform to 3.4.5.

4.9.6.2 Frozen Compound. - The frozen premixed compound shall be capable of passing all examinations and tests specified herein after being stored for seven days at minus 29 ± 2°C (-20.2 ± 3.6°F), to conform to 3.4.5.

NOTE

This specification is not intended to preclude the use of products which are capable of meeting all of the requirements of this specification after they have been stored longer than the applicable storage times specified in 3.4.5. However, the compound shall not be used after the storage life specified by the manufacturer has been reached.

4.9.7 Low-Temperature Flexibility. - Three aluminum-alloy panels, measuring 2.54 by 15.24 by 0.08 cm (1 by 6 by 0.032 inches) shall be used to make the test specimens. A quantity of compound shall be mixed and applied over one side of each panel in a manner that will produce cured coatings with a thickness of 0.127 to 0.167 cm (0.050 to 0.066 inch) leaving 2.54 cm (1 inch) uncoated at each end of the test specimens. The test specimens shall be inserted in a flexibility jig as shown in Figures 1 and 2, so that the uncoated

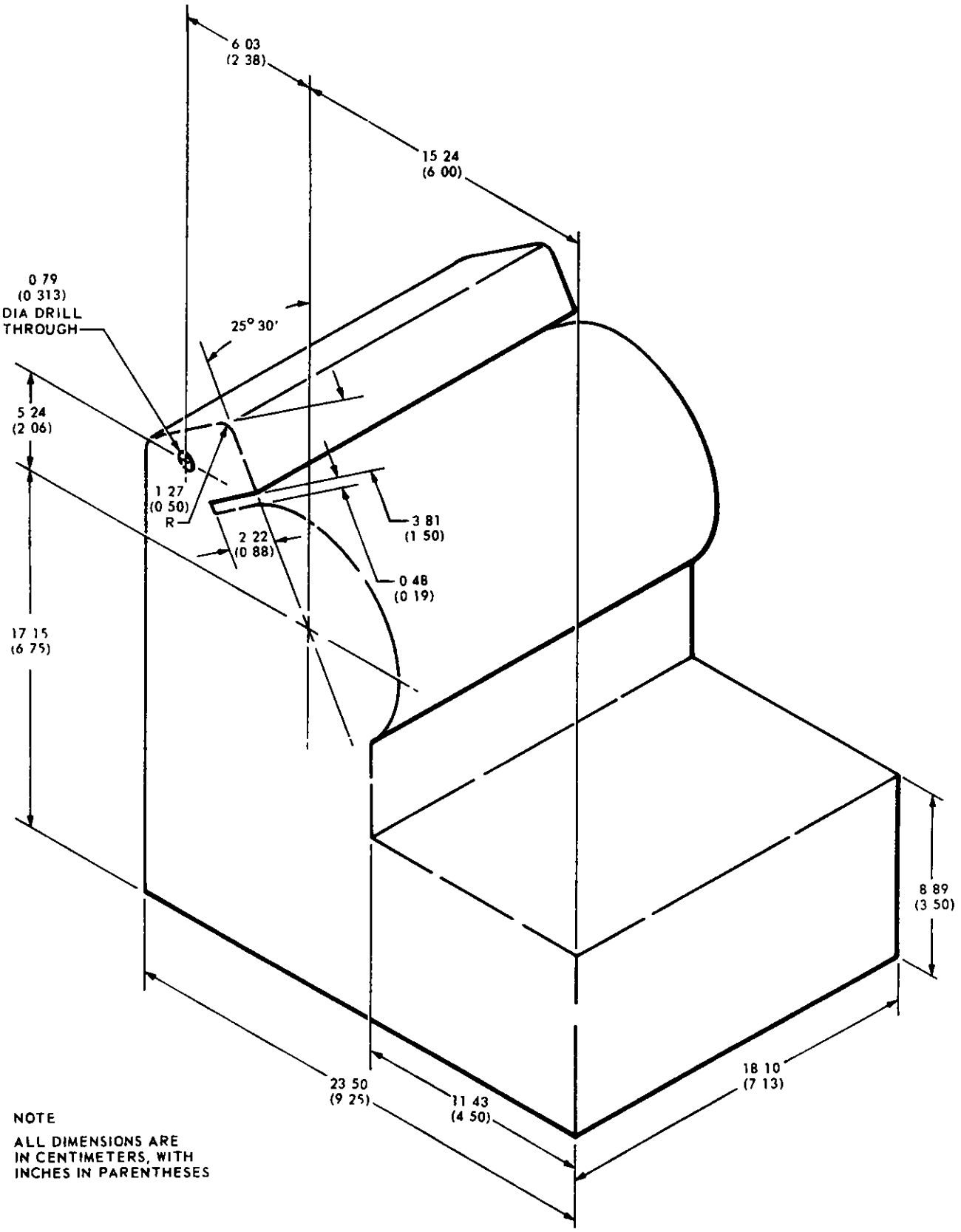

Figure 1. Contour Block

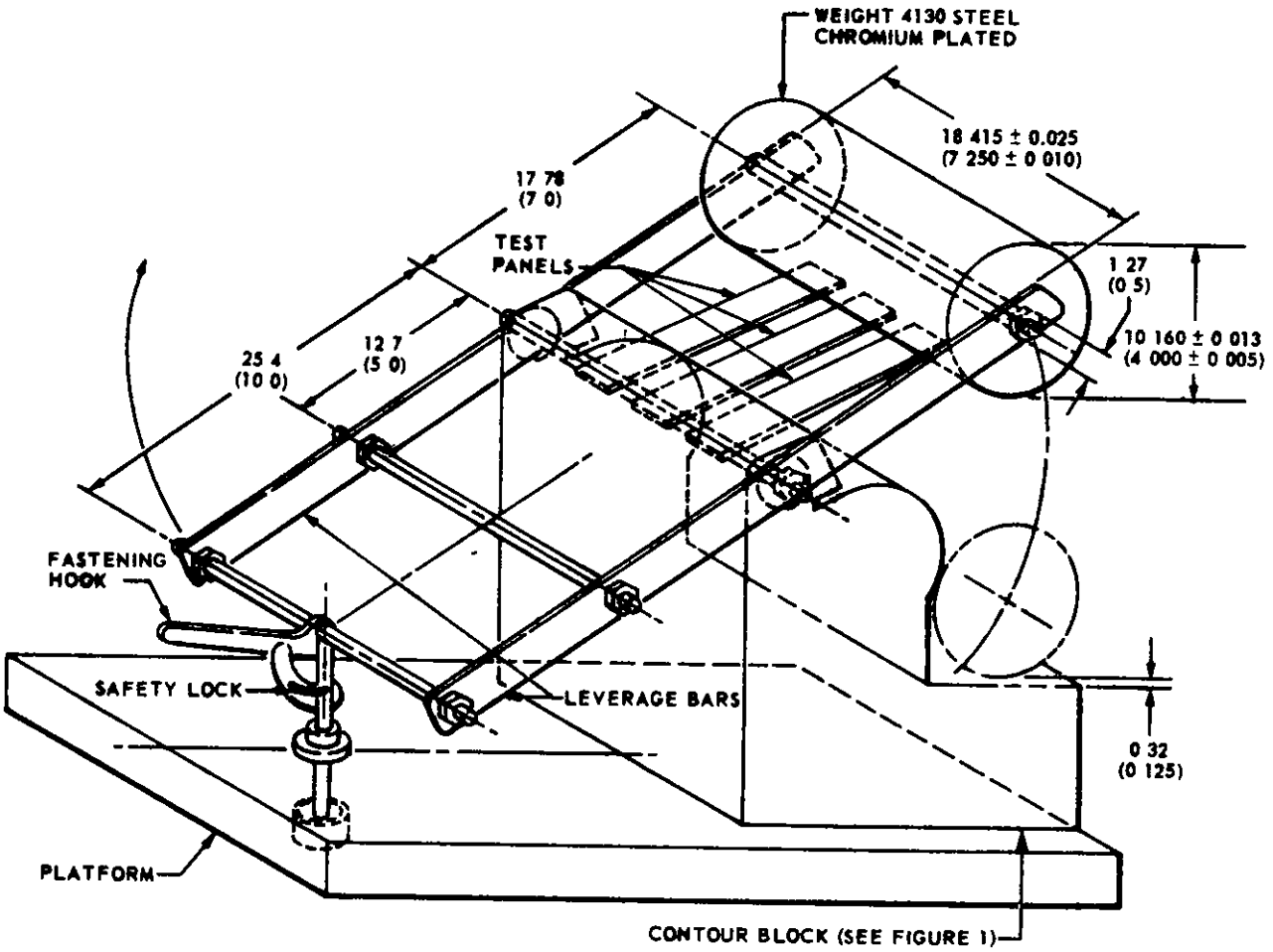

NOTE
ALL DIMENSIONS ARE
IN CENTIMETERS WITH
INCHES IN PARENTHESES.

Figure 2. Low-Temperature Flexibility Apparatus

side will contact the contour block and the weight will contact only the uncoated end of the test specimens. The flexibility jig and test specimens shall be subjected to a conditioning temperature of minus 55 ± 2°C (-67 ± 3.6°F) for four hours. After the specified conditioning, the specimens shall be bent around the curved portion of the flexibility test jig by releasing the fastening hook. The test specimens shall be removed and examined to determine conformance to 3.4.6.

4.9.8 Fungus Resistance. - Two specimens 5.08 cm (2 inches) in diameter and 0.317 cm (0.125 inch) thick shall be tested in accordance with method 508 of of MIL-STD-810 to determine conformance to 3.4.7.

4.9.9 Weight Loss. - A 1/4-gram (0.008-ounce) specimen shall be cut from a sample of molded and cured compound (see 4.9.3). The specimen shall be stabilized at 25°C (77°F), then placed in a thermal-vacuum chamber and subjected to a vacuum of 1×10^{-7} torr and the temperature increased from 25°C to 100°C (212°F) at a rate of 2°C per minute. During this operation, the weight loss shall not exceed 0.2 percent/cm^2/in. After steady-state rate has been reached, the weight loss shall not exceed 0.04 percent/cm^2/hr. Steady-state condition shall be defined as that point where the rate of weight loss has been constant for eight hours. This test determines conformance to 3.4.8.

4.9.10 Resistance to Ozone. - Five specimens 2.54 cm (1 inch) wide by 10.16 cm (4 inches) long by 0.190 to 0.226 cm (0.075 to 0.089 inch) thick shall be prepared as specified in 4.9.2. Bench marks shall be made 2.54 cm (1 inch) apart, centered perpendicular to the length of the specimen. The specimens shall be mounted in a suitable frame adjustable in a manner such that the specimens will be tensioned sufficiently that 2.54 cm (1-inch) bench marks will be separated to 3.175 cm (1.250 inches). The frame and specimens shall be exposed for seven days to an ozone concentration of 50 ± 3 parts of ozone per 100 million parts air at 38 ± 1°C (100.4 ± 1.8°F). At the end of the exposure time the specimens shall be examined under a 7X magnifier to determine conformance to 3.4.9.

4.9.11 Dielectric Constant and Dissipation Factor. - Three disc specimens of cured compound, 5.08 cm (2 inches) in diameter and 0.317 cm (0.125 inch) thick, shall be tested in accordance with ASTM D 150. The specimen shall be tested at 1 MHz to determine conformance to 3.5.

4.9.12 Dielectric Strength. - Three disc specimens of cured compound, 10.16 cm (4 inches) in diameter and 50 mils thick, shall be tested in accordance with ASTM D 149. The tests shall be made under oil and at a frequency of 100 Hz maximum. The voltage shall be increased uniformly at the rate of 500V/s to determine conformance to 3.5.

4.9.13 Volume and Surface Resistivity. - Three disc specimens of cured compound, 10.16 cm (4 inches) in diameter and 0.317 cm (0.125 inch) thick, shall be tested in accordance with ASTM D 257 by the guarded-electrode method using a megohm bridge at a potential of 500V. Readings shall be made one minute after application of current. Calculations necessary for volume and surface resistivity shall be made using the appropriate ASTM formulas for effective perimeter. For testing volume resistivity at 100 ± 1°C (212 ± 1.8°F), the

specimens shall be conditioned at the test temperature for 30 ± 1 minutes prior to testing. All specimens shall conform to the requirements of 3.5.

4.9.14 Arc Resistance. - Three disc specimens of cured compound, 10.16 cm (4 inches) in diameter and 0.317 cm (0.125 inch) thick, shall be tested in accordance with ASTM D 495 to determine conformance to 3.5. The surface of the test specimen shall be smooth and free from dust or other contamination. Each time, prior to applying power to take a measurement, the electrodes shall be cleaned in accordance with ASTM D 495.

4.9.15 Insulation Resistance. - Three specimens shall have dimensions as specified in Figure 3. The mold in which the specimens are cast shall provide for the accurate spacing of brass-rod electrodes. The electrodes shall be 0.317 cm (0.125 inch) in diameter and approximately 7.62 cm (3 inches) long. The electrodes shall be placed in the molded specimens in accordance with the dimensions and orientation depicted in Figure 3 so that 2.54 cm (1 inch) of each pair is spaced 1.27 ± 0.025 cm (0.50 ± 0.010 inch) apart. Measurements shall be made using a megohm bridge at a potential of 500V. Electrification time shall not exceed two minutes. Tests shall be conducted at 24 ± 1°C (75.2 ± 1.8°F) and 100 ± 1°C (212 ± 1.8°F) after a conditioning period of 30 minutes at the test temperature to determine conformance to 3.5.

4.9.16 Insulation Resistance after Moisture Conditioning. - Three specimens, as specified in 4.9.15, shall be utilized for this test. The specimens shall be placed in a humidity chamber at 24 ± 1°C (75.2 ± 1.8°F). The chamber temperature shall be raised uniformly to 71°C (159.8°F) during a two-hour period, maintaining 95-percent relative humidity. These conditions shall be maintained for six hours. During the next 16-hour period, the temperature of the chamber shall drop, at a uniform rate, to 26°C (78.8°F). This shall constitute one cycle. A test to determine conformance to 3.5 shall consist of five complete cycles, after which the specimens shall be tested as specified in 4.9.15.

4.9.17 High Potential. - Three specimens as specified in 4.9.15 shall be utilized for this test. A potential of 1000V rms at 60 Hz shall be applied between all contacts for a period of one minute. The test voltage shall be increased from 0 to 1000V at a uniform rate of 500V/s to determine conformance to 3.5.

4.9.18 Tear Strength. - Three specimens of cured compound shall be tested in accordance with ASTM D 624 to determine conformance to 3.5. The specimens shall be cut with a Model C die. An optional method of preparing the tear-strength test specimen is "direct-molding" which will produce the same exact dimensions of a specimen cut with a Model C die.

4.9.19 Tensile Strength and Elongation. - The tensile strength and elongation testing shall be in accordance with ASTM D 412, Speed C. Three dumbbell specimens shall be cut from cast sheets of cured compound. Check for conformance to 3.5.

4.9.20 Shrinkage. - A cubical mold, approximately 2.54 cm (1.0 inch) on each side and having an open top, shall be utilized for the test. The volume of

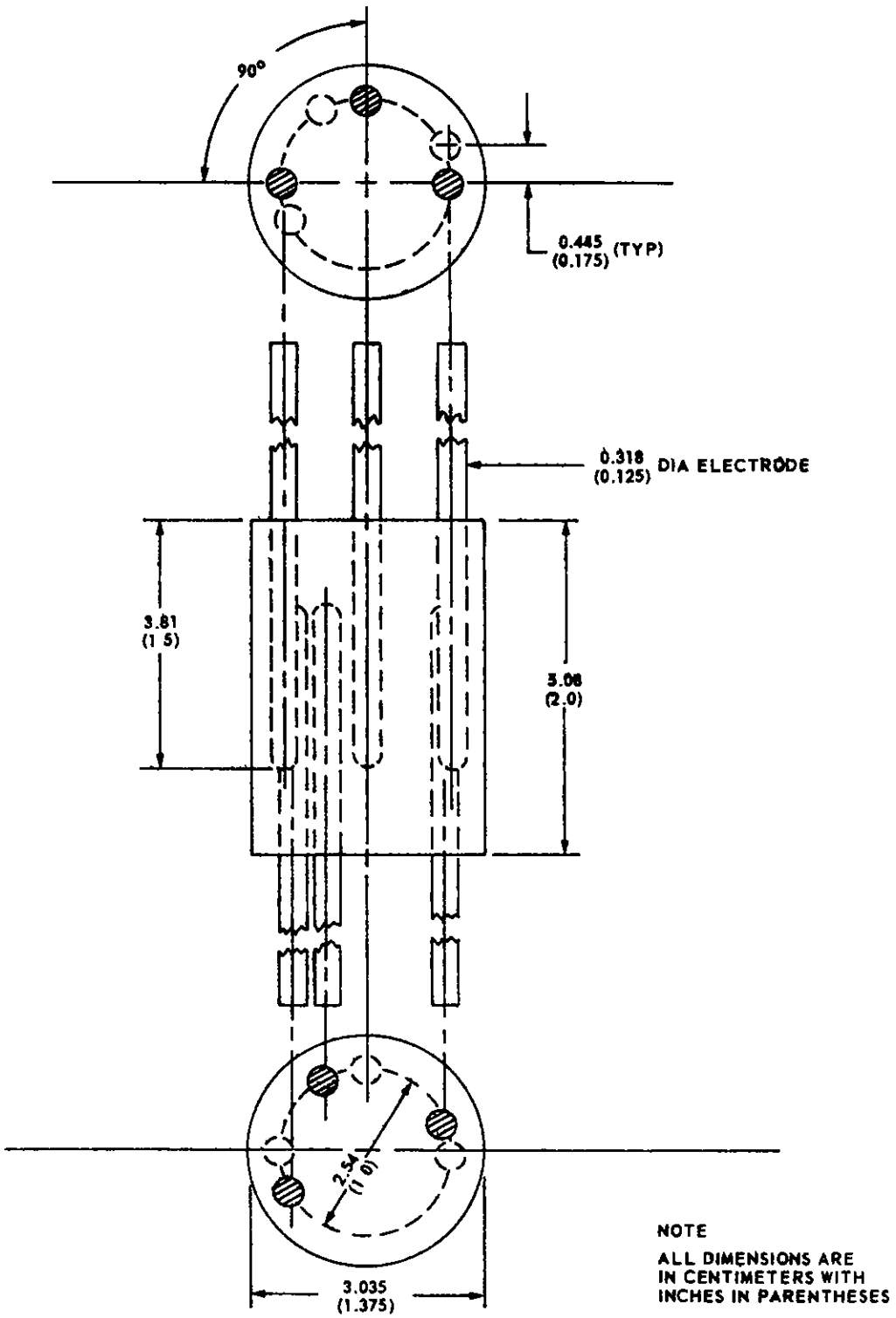

Figure 3. Insulation-Resistance Test Specimen

the mold at 24 ± 1°C (75.2 ± 1.8°F) shall be determined. Mixed compound shall be cast into the mold and conditioned in accordance with 4.9.2. The cured specimen shall be removed from the mold, placed in an air-circulating oven, and conditioned for 96 hours at 82 ± 3°C (179.6 ± 5.4°F). The specimen shall then be cooled, examined, and its volume at 24 ± 1°C (75.2 ± 1.8°F) determined by the water-displacement method. The percent shrinkage shall be calculated as follows:

$$\text{Percent shrinkage} = \frac{V_1 - V_2}{V_1} \times 100, \text{ where}$$

V_1 = volume of the mold and

V_2 = final volume of component

4.9.21 Hardness. - Three specimens of cured compound shall be tested in accordance with ASTM D 2240 to determine conformance to 3.5.

4.9.22 Compression Set. - Two specimens shall be tested in accordance with ASTM D 395, except that the specimens shall be cast in a suitable mold and cured in accordance with 4.9.2 instead of being cut with a circular metal die. The compression employed for testing shall be 20 percent for each hardness. This test determines compliance to 3.5.

4.9.23 Adhesion.

4.9.23.1 Metal Test Specimens. - A 7.62-by 15.24-cm (3-by 6-inch) by approximately 0.152-cm-thick (0.06-inch thick) aluminum-alloy panel shall be cleaned with a suitable solvent conforming to TT-M-261. Clean cotton-gauze sponges shall be used to wipe the wet solvent from the surfaces to avoid redeposit of contaminants. A 0.317-cm (0.125-inch) coating of the molding compound shall be applied to the cleaned metal panel. A 7.62-by 15.24-cm (3-by 6-inch) area of a 7.62-by 30.48-cm (3-by 12-inch) strip of cotton-duck sheeting shall be completely coated on one side with molding compound and placed on the panel, leaving a loose end approximately 15.24 cm (6 inches) in length. The panel shall be cured for 16 hours at 82 ± 2°C (179.6 ± 3.6°F). Two 2.54-cm (1-inch) wide strips shall be cut through the compound and fabric to the panel surface, extending the full length of the loose end of the fabric. The edge of the panel shall not be used as one edge of the test strip. The test shall be performed in accordance with 4.9.23.4.

4.9.23.2 Rubber Test Specimens. - A 30.48-cm by 3.81-cm (12-inch by 1.50-inch) by 0.190-cm (0.075-inch) thick (nominal) rubber specimen, SC 615, qualified to MIL-R-3065, shall be buffed with a suitable abrasive to clean the surface. Loose dust shall be removed by blowing off with clean, dry air and wiping the surface. The rubber shall be placed buffed side down on a mold (see Figure 4) and secured in place with masking tape. The assembled mold shall be placed rubber side down on a flat surface and the cavity shall be completely filled with the molding compound to a slight crown. A metal panel, cleaned and primed, shall be placed on top of the mold. The test specimen shall be cured with the rubber side down for 16 hours at 82 ± 2°C (179.6 ± 3.6°F) and then allowed to cool at least 12 hours at room temperature

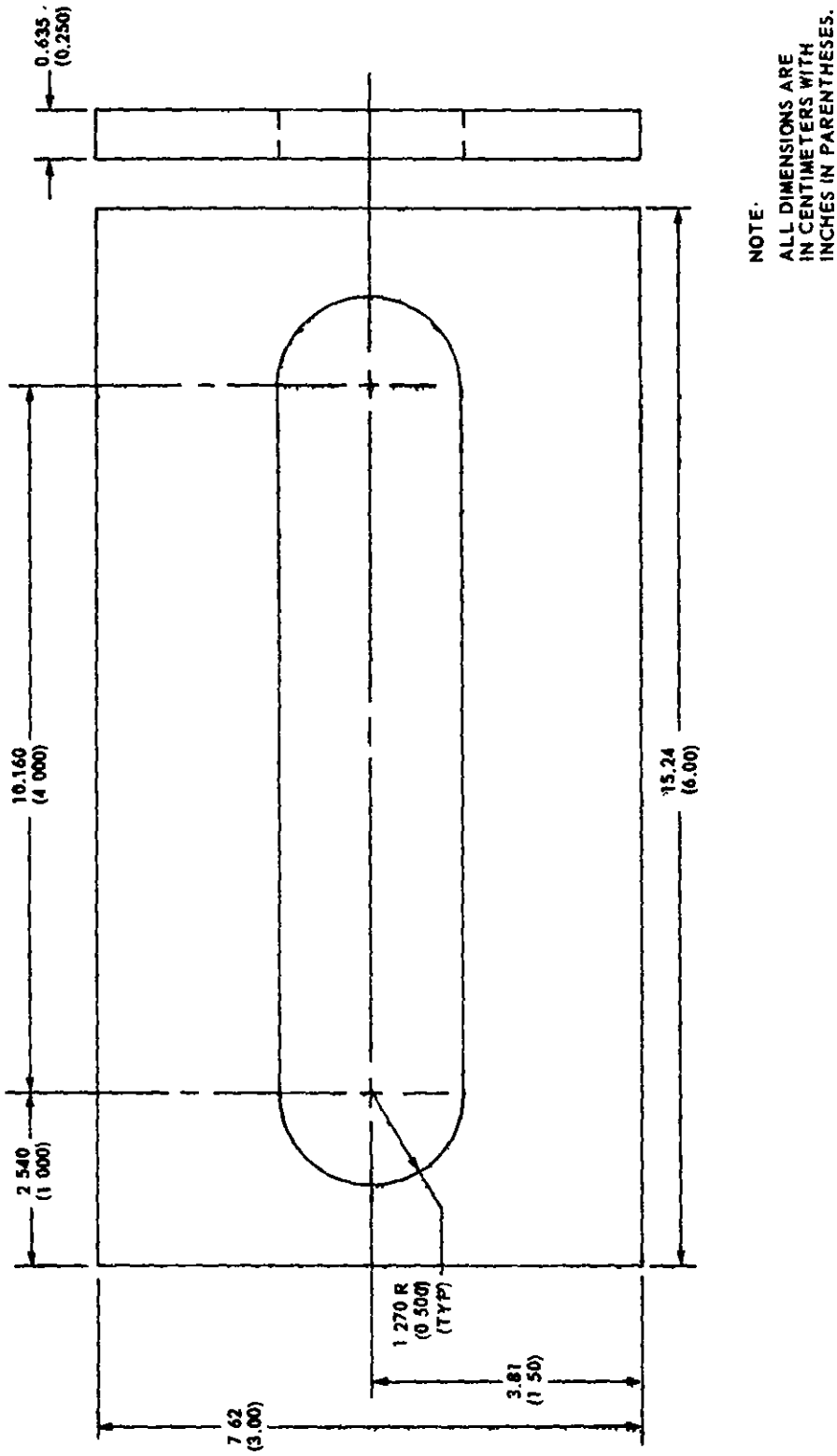

Figure 4. Adhesion Test Setup

prior to testing. The test shall be conducted in accordance with 4.9.23.4.

4.9.23.3 Vinyl Test Specimen. - A 30.48-cm (12-inch) sample of vinyl tubing conforming to MIL-I-7444, 1.27 cm (0.50 inch) in diameter or larger, shall be split lengthwise. The surface of the vinyl tubing shall be made tacky by applying MEK conforming to TT-M-261. The test specimen shall then be prepared in the same manner as the rubber specimen in 4.9.23.2 and the test shall be conducted in accordance with 4.9.23.4.

4.9.23.4 Test Method. - The specimens prepared as specified in 4.9.23.1 through 4.9.23.3 shall be tested in accordance with ASTM D 429 except that a 180-degree pull and a jaw-separation rate of 5.080 ± 0.317 cm (2 ± 0.125 inches) per minute shall be used to determine conformance to 3.5.

4.9.24 Specific Gravity. - One specimen shall be tested in accordance with ASTM D 792 to determine conformance to 3.5.

4.9.25 Flammability. - Three specimens shall be cut or molded to size and tested in accordance with ASTM D 568. The specimens shall be self-extinguishing, as defined by ASTM D 568, in order to conform to 3.5.

4.9.26 Coefficient of Linear Thermal Expansion. - Three specimens shall be molded to size and tested in accordance with ASTM D 696 to determine conformance to 3.5. The temperature range shall be 50°C to 100°C (122°F to 212°F).

4.9.27 Nonvolatile Content. - Fresh molding compound shall be transferred immediately to tarred containers 4.445 cm (1.750 inches) in diameter and 3.175 cm (1.250 inches) deep. The compound shall be leveled even with the top of the dish. The dish shall be weighed. The dish shall then be exposed to 82 ± 1°C (179.6 ± 1.8°F) for 24 ± 1 hours. The samples shall then be removed from the oven and allowed to cool to room temperature. The dish shall then be weighed to determine conformance to 3.3.2. Percent nonvolatile content equals the weight of compound after heating times 100 divided by the weight of the compound before heating.

4.9.28 Hydrolytic Stability. - Three specimens of cured compound shall be prepared and tested as specified herein.

4.9.28.1 Specimen Preparation. - The specimens shall be individually cast or cut to a diameter of 2.54 to 7.62 cm (1 to 3 inches) and a thickness of 1.27 to 2.54 cm (0.5 to 1 inch).

4.9.28.2 Hydrolytic Stability Test. - The specimens shall be placed in small individual metal trays on porcelain trays of borosilicate glass desiccators having saturated solutions of potassium sulphate (K_2SO_4) in the bottom section. This aqueous solution results in a relative humidity of about 95 percent at a temperature of 100°C (212°F). Care must be exercised in preparing the salt solution to ensure that an excess of the salt is present in the solution at the 100°C (212°F) temperature. The dessicators shall be covered and placed in a forced-air convection oven maintained at 100 ± 1°C (212 ± 1.8°F) for 28 days. At the end of the 28-day test period, the specimens must have a minimum Shore A hardness of 30, as measured in 4.9.21, and must show no indication of surface tackiness to conform to the requirements of 3.5.

5. PREPARATION FOR DELIVERY.

5.1 Two-Part Kits. - The base compound and curing agent shall be packaged in individual containers. The ratio of the quantity contained in the base-compound container to the quantity contained in the curing-agent container shall be the same as the recommended mixing ratio of the base compound and curing agent.

5.1.2 Frozen Compound. - The frozen compound shall be premixed, degassed, and packaged in polyethylene cartridges complete with plunger and cartridge cap.

5.2 Packing. - All exterior shipping containers in the shipment shall contain the same number of the type of unit packages. Shipping containers shall be of uniform size and shall be so designed as to ensure that damage is prevented during handling and shipping. Frozen shipments shall be packed in a manner that will prevent thawing or other damage during transit.

5.3 Marking. - Interior packages and shipping containers shall be marked in accordance with MIL-STD-129 and shall include the following:

5.3.1 Base-Compound Containers. - Each base-compound container shall be durably and legibly marked with the following information:

(a) Title, number, and date of this specification.

(b) Classification (see 1,2).

(c) Manufacturer's name and address.

(d) Manufacturer's product designation.

(e) Manufacturer's lot (batch) designation.

(f) Manufacturer's lot (batch) designation for the curing agent with which the base compound is to be used.

(g) Stock number (if applicable).

(h) Date of manufacture.

(i) Contract or order number.

(j) Quantity contained.

(k) Precautionary measure for handling, shipping, and storage.

5.3.2 Curing-Agent Container. - Each curing-agent container shall be durably and legibly marked with the following information:

(a) Manufacturer's name and address.

(b) Manufacturer's product designation.

(c) Manufacturer's lot (batch) designation.

(d) Manufacturer's lot (batch) designation for the base compound with which the curing agent is to be used.

(e) Date of manufacture.

(f) Precautionary measures for handling, shipping, and storage.

5.3.3 Frozen Cartridges. - Each frozen cartridge shall be durably and legibly marked with the following information:

(a) Title, number, and date of this specification.

(b) Classification (see 1.2).

(c) Manufacturer's name and address.

(d) Manufacturer's product designation.

(e) Manufacturer's lot (batch) designation.

(f) Stock number (if applicable).

(g) Date of manufacture.

(h) Contract or order number.

(i) Quantity contained.

(j) Date mixed, degassed, and frozen.

(k) Precautionary measures for handling, shipping, and storage.

5.3.4 Exterior Shipping Containers. - Each exterior shipping container shall be legibly and durably marked with cautions, warnings, and adequate instructions to ensure that damage during handling and shipping is prevented. Instructions for handling to prevent thawing during transit from manufacturer to procuring activity and storage after receiving shall be marked on all exterior shipping containers for frozen cartridges.

6. NOTES.

6.1 Abbreviations.

cm	centimeter(s)
^{o}C	degrees Celsius
^{o}F	degrees Fahrenheit

g	gram(s)
Hz	hertz
hr	hour(s)
in	inch(es)
KSC	John F. Kennedy Space Center
lb	pound(s)
max	maximum
MEK	methyl-ethyl-ketone
mmHg	millimeters of mercury
min	minimum
P	poise(s)
PVC	polyvinylchloride
rms	root mean square
s	second(s)
V	volt(s)

6.2 Intended Use. - The elastomeric compounds covered by this specification are intended for use in potting and molding of electrical equipment and cable connectors used in space vehicle and associated equipment.

6.3 Ordering Data. - Procurement documents should specify the following:

(a) Title, number, and date of this specification.

(b) Type of elastomeric compound (see 1.2).

(c) Whether a quality-assurance sample is required (see 3.2.2 and 4.5.1).

(d) Where tests are to be performed if at other than the manufacturer's own facility (see 4.1).

(e) Whether acceptance inspection is required (see 4.6.2).

(f) Number and size of two-part kits or premixed frozen cartridges.

(g) Color, if required.

6.4 Provisions for Qualifications. - With respect to products requiring qualification, awards will be made only for such products as have been tested and approved for inclusion into the applicable KSC-Approved Products List prior to the bid-opening date, whether or not such products have actually been listed by that date. The supplier's attention is called to this requirement, and manufacturers are urged to make arrangements for qualification testing of their products in order that they may be eligible for contracts to supply the products covered by this specification. Requests for information pertaining to qualification of products covered by this specification should be addressed as follows:

DESIGN ENGINEERING, DD-EDD
NASA/KENNEDY SPACE CENTER
KENNEDY SPACE CENTER, FLORIDA 32899

Notice. - When Government drawings, specifications, or other data are used for any purpose other than in connection with a definitely related Government procurement operation, the United States Government thereby incurs no respons bility nor any obligation whatsoever; and the fact that the Government may ha formulated, furnished, or in any way supplied the said drawings, specificatio or other data is not to be regarded by implication or otherwise as in any manner licensing the holder or any other person or corporation, or conveying any rights or permission to manufacture, use, or sell any patented invention that may in any way be related thereto.

CUSTODIAN:

NASA - JOHN F. KENNEDY SPACE CENTER

PREPARING ACTIVITY:

JOHN F. KENNEDY SPACE CENTER
Electrical/Electronic Design Division
Design Engineering Directorate

DISTRIBUTION LIST

John F. Kennedy Space Center, NASA
Kennedy Space Center, Florida 32899

DD
DD-EDD
DD-EDD-1 (2)
DD-EDD-2 (3)
DD-EDD-3 (2)
DD-FEO (4)
DD-MDD
DD-SED
DD-SED-1
DD-SED-2
DD-SED-3
DD-SED-4
DF
DF-PIO (2)
AD-PRO
IN-MSD (2)
IN-OIS (2)
IS-LOG (2)
IS-LOG-11 (2)
IS-PEM
IS-QAL
LL-FAC
LS-ENG
LV-GDC
LV-PLN
LV-QAL
QA-PLN
SF
SO-ENG
SO-OPN
SO-QAL
SO-LAB-1
SO-LAB-4
BEN-3000 (2)
BEN-5300 (2)
BOFP-30 (2)
PANAM-3 (25)
NWSI-S (36)
AD-PRO-4 (2)

TOTAL: 114 Copies