NOTICE: WHEN GOVERNMENT DRAWINGS, SPECIFICATIONS OR OTHER DATA ARE USED FOR ANY PURPOSE OTHER THAN IN CONNECTION WITH A DEFINITELY RELATED GOVERNMENT PROCUREMENT OPERATION, THE UNITED STATES GOVERNMENT THEREBY INCURS NO RESPONSIBILITY NOR ANY OBLIGATION WHATSOEVER AND THE FACT THAT THE GOVERNMENT MAY HAVE FORMULATED, FURNISHED, OR IN ANY WAY SUPPLIED THE SAID DRAWINGS, SPECIFICATIONS, OR OTHER DATA IS NOT REGARDED BY IMPLICATION OR OTHERWISE AS IN ANY MANNER LICENSING THE HOLDER OR ANY OTHER PERSON OR CORPORATION, OR CONVEYING ANY RIGHTS OR PERMISSION TO MANUFACTURE, USE, OR SELL ANY PATENTED INVENTION THAT MAY IN ANY WAY BE RELATED THERETO.

FED SUP CLASS
4730

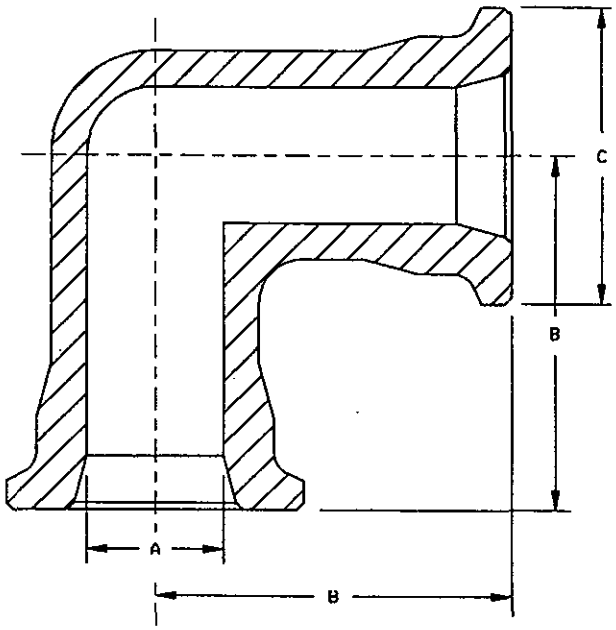

MATERIAL CODE: SEE SHEET 2.

TEMPERATURE RANGE: SEE MATERIAL SPECIFICATION.

NOTES:

1. ALL MATERIALS ARE PER ASTM SPECIFICATIONS
2. ALL DIMENSIONS ARE IN INCHES.
3. TOLERANCE: SEE KC161.
4. FOR DESIGN FEATURE PURPOSES, THIS DRAWING TAKES PRECEDENCE OVER PROCUREMENT DOCUMENTS REFERENCED HEREIN.
5. REFERENCED DOCUMENTS SHALL BE OF THE ISSUE IN EFFECT ON THE DATE OF INVITATION FOR BID.
6. DASH NUMBERS 1 TO 5 ARE NOT TO BE USED FOR NEW DESIGN. SEE DASH NUMBERS 21 TO 24.
7. DO NOT USE THIS STANDARD FOR ITEMS WHICH CANNOT BE IDENTIFIED BY THE LIMITATIONS CONTAINED HEREIN.
8. ALL PARTS NOT MANUFACTURED BY GRAY TOOL CO. MUST BE CERTIFIED BY THE MANUFACTURER TO BE INTERCHANGEABLE WITH THE GRAY TOOL PART NUMBER.

EXAMPLE OF PART NOS. BASIC PART NUMBER KC156-3A
- MATERIAL CODE
- DASH NUMBER

APPROVED SOURCE: COMMERCIAL PARTS CAN BE PURCHASED FROM: VETCO-GRAY INC. 10777 NW FWY PO BOX 2291 HOUSTON, TX 77252-2291

ALTERNATE SOURCES:

OTECO EQUIPMENT COMPANY
2811 TROUT STREET
P.O. BOX 1849
HOUSTON, TX 77251-1849

REFLANGE, INC.
5730 CENTRALCREST
HOUSTON, TX 77092

APPROVED: 9-19-67 REVISED: (E) CHANGED APPROVED SOURCE. 10-2-92

CUSTODIAN: JOHN F. KENNEDY SPACE CENTER		
PROCUREMENT SPEC. NONE	ELBOW, 90° PIPE HUB	STANDARD PART
COORDINATION STATUS KSC DE		KC156
		SHEET 1 OF 2

KSC FORM 32-85 (CG 4/92)

FED SUP CLASS
4730

DASH NO.	PIPE SIZE	HUB SIZE	DIMENSIONS A	DIMENSIONS B ±1/32	DIMENSIONS C	-A SA-105 GRII GRAYLOC STK NO.	-B SA-182 F-316SS GRAYLOC STK NO.	
1	½	½-¾GR5	.625	2.000	1.562	54105	54152	FORGED
2	½	½-¾GR4	.500	2.000	1.562	54102	54149	FORGED
3	¾	¾GR5	.625	2.000	1.562	54105	54152	FORGED
4	¾	¾GR4	.500	2.000	1.562	54102	54149	FORGED
5	1	1-1¼-1½GRII	1.125	4.000	3.125	54106	54153	FORGED
6	1½	1¼-1½GRI4	1.610	4.000	3.125	54107	54156	FORGED
7	2	2GR20	2.063	4.000	3.625	54117	54129	FORGED
8	2	2GRI4	1.610	4.000	3.625	54114	54162	FORGED
9	2½	2½GR25	2.672	5.375	5.000	54119	54145	FORGED
10	2½	2½GR20	2.063	5.375	5.000	54118	54163	FORGED
11	3	3GR27	3.063	5.375	5.000	54122	54146	FORGED
12	3	3GR25	2.672	5.375	5.000	54119	54145	FORGED
13	4	4GR40	4.063	6.000	6.000	54125	54174	CAST
14	4	4GR34	3.688	6.000	6.000	54126	54172	CAST
15	4	4GR31	3.250	6.000	6.000	54127	54168	CAST
16	5	5GR52	5.313	8.000	7.500	54144	54213	CAST
17	5	5GR46	4.750	8.000	7.500	54382	54391	CAST
18	5	5GR40	4.063	8.000	7.500	54123	54147	CAST
19	6	6GR62	6.065	9.000	9.250	54130	54182	CAST
20	6	6GR52	5.313	9.000	9.250	54131	54181	CAST
						-A SA-148 GR90/60	-B SA-351 CF8M	
21	½,¾	1GR4	.500	3.000	2.000	54798	54804	FORGED
22	½,¾,1	1GR5	.625	3.000	2.000	54799	54805	FORGED
23	¾,1	1GR7	.906	3.000	2.000	54800	54414	FORGED
24	1	1GRII	1.125	3.000	2.000	54801	54807	FORGED
						-A SA-105 GRII	-B SA-182 F-316SS	

6

REVISED: Ⓔ CHANGED APPROVED VENDOR ON SHEET 1. 10-2-92

APPROVED: 9-19-67

NOTICE: WHEN GOVERNMENT DRAWINGS, SPECIFICATIONS OR OTHER DATA ARE USED FOR ANY PURPOSE OTHER THAN IN CONNECTION WITH A DEFINITELY RELATED GOVERNMENT PROCUREMENT OPERATION, THE UNITED STATES GOVERNMENT THEREBY INCURS NO RESPONSIBILITY NOR ANY OBLIGATION WHATSOEVER AND THE FACT THAT THE GOVERNMENT MAY HAVE FORMULATED, FURNISHED, OR IN ANY WAY SUPPLIED THE SAID DRAWINGS, SPECIFICATIONS, OR OTHER DATA IS NOT REGARDED BY IMPLICATION OR OTHERWISE AS IN ANY MANNER LICENSING THE HOLDER OR ANY OTHER PERSON OR CORPORATION, OR CONVEYING ANY RIGHTS OR PERMISSION TO MANUFACTURE, USE, OR SELL ANY PATENTED INVENTION THAT MAY IN ANY WAY BE RELATED THERETO.

CUSTODIAN: JOHN F. KENNEDY SPACE CENTER

PROCUREMENT SPEC.
NONE

COORDINATION STATUS
KSC DE

ELBOW, 90° PIPE HUB

STANDARD PART
KC156

SHEET 2 OF 2

KSC FORM 32-85 (CG 4/92)