NOTICE: WHEN GOVERNMENT DRAWINGS, SPECIFICATIONS OR OTHER DATA ARE USED FOR ANY PURPOSE OTHER THAN IN CONNECTION WITH A DEFINITELY RELATED GOVERNMENT PROCUREMENT OPERATION, THE UNITED STATES GOVERNMENT THEREBY INCURS NO RESPONSIBILITY NOR ANY OBLIGATION WHATSOEVER AND THE FACT THAT THE GOVERNMENT MAY HAVE FORMULATED, FURNISHED, OR IN ANY WAY SUPPLIED THE SAID DRAWINGS, SPECIFICATIONS, OR OTHER DATA IS NOT REGARDED BY IMPLICATION OR OTHERWISE AS IN ANY MANNER LICENSING THE HOLDER OR ANY OTHER PERSON OR CORPORATION, OR CONVEYING ANY RIGHTS OR PERMISSION TO MANUFACTURE, USE, OR SELL ANY PATENTED INVENTION THAT MAY IN ANY WAY BE RELATED THERETO.

FED SUP CLASS
4730

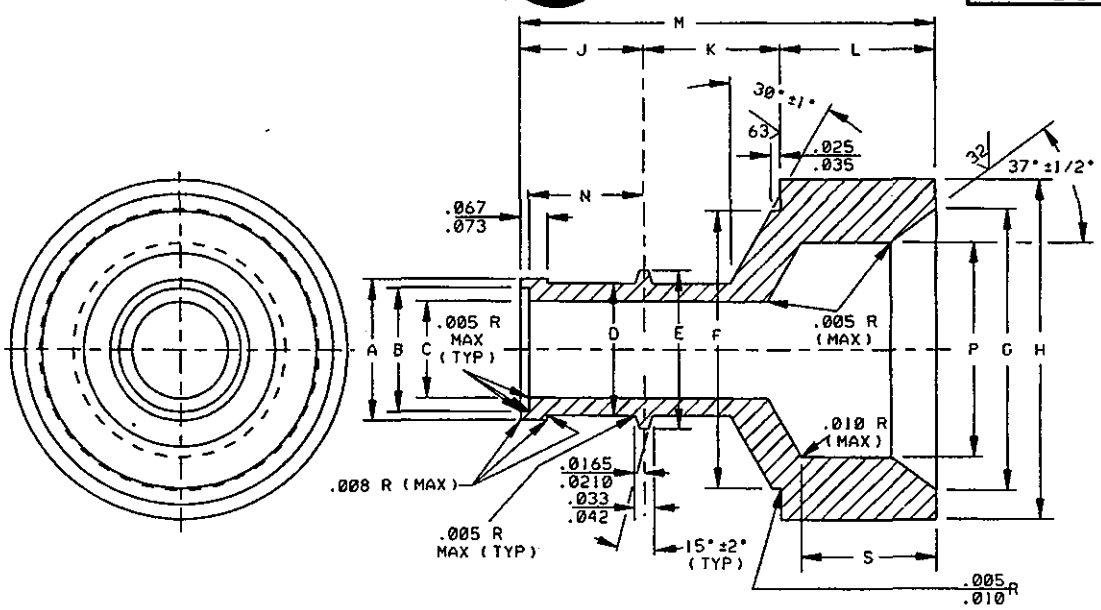

SCHEDULE:

ADD "A" AFTER DASH NUMBER TO DENOTE .035" TUBE WALL.
ADD "B" AFTER DASH NUMBER TO DENOTE .049" TUBE WALL.
ADD "C" AFTER DASH NUMBER TO DENOTE .058" TUBE WALL.
ADD "D" AFTER DASH NUMBER TO DENOTE .065" TUBE WALL.
ADD "E" AFTER DASH NUMBER TO DENOTE .072" TUBE WALL.
ADD "F" AFTER DASH NUMBER TO DENOTE .095" TUBE WALL.
ADD "G" AFTER DASH NUMBER TO DENOTE .109" TUBE WALL.
ADD "H" AFTER DASH NUMBER TO DENOTE .120" TUBE WALL.
ADD "J" AFTER DASH NUMBER TO DENOTE .134" TUBE WALL.
ADD "K" AFTER DASH NUMBER TO DENOTE .156" TUBE WALL.
ADD "L" AFTER DASH NUMBER TO DENOTE .188" TUBE WALL.

MATERIAL: SEE PROCUREMENT SPECIFICATION.
CORROSION RESISTANT STEEL (CLASS 316), CODE "K"

FINISH: SURFACE SHALL BE 125 RMS MAXIMUM PER ANSI B46.1 UNLESS OTHERWISE SPECIFIED.

NOTES:

1. REMOVE BURRS AND SLIVERS. BREAK SHARP EDGES UNLESS OTHERWISE NOTED.
2. DIMENSIONS IN INCHES. UNLESS OTHERWISE SPECIFIED, TOLERANCE DECIMALS ±.016.
3. FOR DESIGN FEATURE PURPOSES, THIS DRAWING TAKES PRECEDENCE OVER PROCUREMENT DOCUMENTS REFERENCED HEREIN.
4. REFERENCED DOCUMENTS SHALL BE OF THE ISSUE IN EFFECT ON THE DATE OF INVITATION FOR BID.
5. MARKING OF FITTINGS SHALL BE CONSISTANT WITH PROCUREMENT SPECIFICATION USING APPLICABLE KC STANDARD AND PART NUMBER DESIGNATIONS AS SHOWN ON THIS DRAWING.
6. ALL DIAMETRAL DIMENSIONS SHALL BE CONCENTRIC WITH "C" BORE WITHIN .005 T.I.R.
7. FITTINGS PROVIDED HEREIN SHALL BE WELDED TO CORRESPONDING TUBE SIZES USING AUTOMATIC WELDING EQUIPMENT (ASTRO-ARC CO. OR EQUIVALENT).

EXAMPLE OF PART NOS. KC151K4A-8 = SPUD, BUTTWELD TUBE, REDUCER-ADAPTER, FOR ¼" X .035 WALL TUBING TO ½" TUBE SIZE.

REVISED:

APPROVED: 5-1-90

CUSTODIAN: JOHN F. KENNEDY SPACE CENTER		
PROCUREMENT SPEC. KSC-F-124	SPUD, BUTTWELD TUBE REDUCER - ADAPTER	STANDARD PART KC151
COORDINATION STATUS KSC DE		SHEET 1 OF 2

KSC FORM 32-85 (CG 4/92)

NOTICE: WHEN GOVERNMENT DRAWINGS, SPECIFICATIONS OR OTHER DATA ARE USED FOR ANY PURPOSE OTHER THAN IN CONNECTION WITH A DEFINITELY RELATED GOVERNMENT PROCUREMENT OPERATION, THE UNITED STATES GOVERNMENT THEREBY INCURS NO RESPONSIBILITY NOR ANY OBLIGATION WHATSOEVER AND THE FACT THAT THE GOVERNMENT MAY HAVE FORMULATED, FURNISHED, OR IN ANY WAY SUPPLIED THE SAID DRAWINGS, SPECIFICATIONS, OR OTHER DATA IS NOT REGARDED BY IMPLICATION OR OTHERWISE AS IN ANY MANNER LICENSING THE HOLDER OR ANY OTHER PERSON OR CORPORATION, OR CONVEYING ANY RIGHTS OR PERMISSION TO MANUFACTURE, USE, OR SELL ANY PATENTED INVENTION THAT MAY IN ANY WAY BE RELATED THERETO.

DASH NO.	TUBE SIZE REF	FITTING END TUBE SIZE	A ±.003	B +.005 -.000	C ±.003	D +.005 -.000	E ±.003	F ±.004	G ±.005	H +.000 -.003	J ±.005	K ±.005	L ±.005	M (REF)	N ±.005	P +.000 -.003	S +.000 -.015
K4A-6	¼" X .035	⅜	.285	.255	.172	.258	.297	.434	.441	.502	.385	.382	.245	1.012	.350	.297	.236
K4A-8	¼" X .035	½	.285	.255	.172	.258	.297	.564	.589	.682	.385	.420	.280	1.085	.350	.393	.282
K4A-12	¼" X .035	¾	.285	.255	.172	.258	.297	.828	.880	.972	.385	.496	.300	1.181	.350	.611	.315
K6A-8	⅜" X .035	½	.410	.380	.297	.383	.428	.564	.589	.682	.385	.446	.280	1.111	.350	.393	.282
K6A-12	⅜" X .035	¾	.410	.380	.297	.383	.428	.828	.880	.972	.385	.522	.300	1.207	.350	.611	.315
K6C-8	⅜" X .058	½	.410	.380	.251	.383	.428	.564	.589	.682	.385	.446	.280	1.111	.350	.393	.255
K6C-12	⅜" X .058	¾	.410	.380	.251	.383	.428	.828	.880	.972	.385	.522	.300	1.207	.350	.611	.288
K8B-12	½" X .049	¾	.546	.506	.393	.509	.554	.828	.880	.972	.385	.548	.300	1.233	.350	.611	.299
K8B-16	½" X .049	1	.546	.506	.393	.509	.554	1.083	1.130	1.222	.385	.621	.400	1.406	.350	.801	.417
K8E-12	½" X .072	¾	.546	.506	.347	.509	.554	.828	.880	.972	.385	.548	.300	1.233	.350	.611	.272
K8E-16	½" X .072	1	.546	.506	.347	.509	.554	1.083	1.130	1.222	.385	.621	.400	1.412	.350	.801	.391
K12D-16	¾" X .065	1	.816	.756	.611	.759	.804	1.083	1.130	1.222	.535	.456	.400	1.391	.500	.801	.399
K12D-20	¾" X .065	1¼	.816	.756	.611	.759	.804	1.341	1.412	1.536	.535	.530	.400	1.465	.500	1.184	.362
K12D-24	¾" X .065	1½	.816	.756	.611	.759	.804	1.611	1.630	1.786	.535	.608	.475	1.618	.500	1.444	.440
K12G-16	¾" X .109	1	.816	.756	.523	.759	.804	1.083	1.130	1.222	.535	.456	.400	1.391	.500	.801	.348
K12G-20	¾" X .109	1¼	.816	.756	.523	.759	.804	1.341	1.412	1.536	.535	.530	.400	1.465	.500	1.184	.312
K12G-24	¾" X .109	1½	.816	.756	.523	.759	.804	1.611	1.630	1.786	.535	.608	.475	1.618	.500	1.444	.389
K16F-20	1" X .095	1¼	1.066	1.006	.801	1.009	1.054	1.341	1.412	1.536	.535	.458	.400	1.393	.500	1.184	.328
K16F-24	1" X .095	1½	1.066	1.006	.801	1.009	1.054	1.611	1.630	1.786	.535	.536	.475	1.546	.500	1.444	.406
K16H-20	1" X .120	1¼	1.066	1.006	.751	1.009	1.054	1.341	1.412	1.536	.535	.458	.400	1.393	.500	1.184	.299
K16H-24	1" X .120	1½	1.066	1.006	.751	1.009	1.054	1.611	1.630	1.786	.535	.536	.475	1.546	.500	1.444	.377
K20B-24	1¼" X .049	1½	1.330	1.256	1.143	1.259	1.304	1.611	1.630	1.786	.535	.526	.475	1.536	.500	1.444	.459
K20J-24	1¼" X .134	1½	1.330	1.256	.973	1.259	1.304	1.611	1.630	1.786	.535	.526	.475	1.536	.500	1.444	.361
K24B-32	1½" X .049	2	1.605	1.511	1.398	1.514	1.559	2.161	2.195	2.411	.535	.611	.540	1.686	.500	1.856	.564
K24L-32	1½" X .188	2	1.605	1.511	1.218	1.514	1.559	2.161	2.195	2.411	.535	.611	.540	1.686	.500	1.856	.404

APPROVED: 5-1-90 REVISED:

FED SUP CLASS 4730

CUSTODIAN: JOHN F. KENNEDY SPACE CENTER

PROCUREMENT SPEC. KSC-F-124

COORDINATION STATUS KSC DE

SPUD, BUTTWELD TUBE REDUCER - ADAPTER

STANDARD PART KC151

SHEET 2 OF 2

KSC FORM 32-85 (GG 4/92)

GP-425