NOTICE: WHEN GOVERNMENT DRAWINGS, SPECIFICATIONS OR OTHER DATA ARE USED FOR ANY PURPOSE OTHER THAN IN CONNECTION WITH A DEFINITELY RELATED GOVERNMENT PROCUREMENT OPERATION, THE UNITED STATES GOVERNMENT THEREBY INCURS NO RESPONSIBILITY NOR ANY OBLIGATION WHATSOEVER AND THE FACT THAT THE GOVERNMENT MAY HAVE FORMULATED, FURNISHED, OR IN ANY WAY SUPPLIED THE SAID DRAWINGS, SPECIFICATIONS, OR OTHER DATA IS NOT REGARDED BY IMPLICATION OR OTHERWISE AS IN ANY MANNER LICENSING THE HOLDER OR ANY OTHER PERSON OR CORPORATION, OR CONVEYING ANY RIGHTS OR PERMISSION TO MANUFACTURE, USE, OR SELL ANY PATENTED INVENTION THAT MAY IN ANY WAY BE RELATED THERETO.

FED SUP CLASS
4730

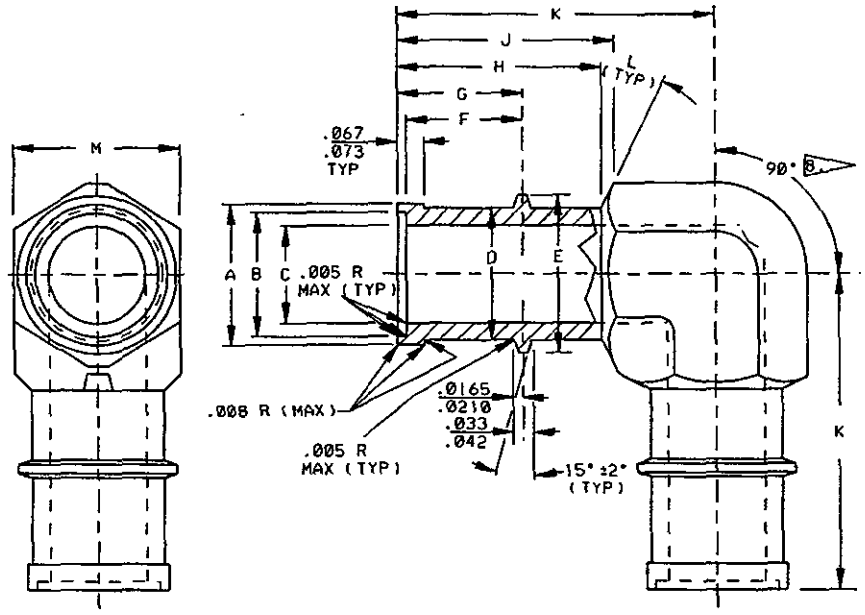

SCHEDULE:

ADD "A" AFTER DASH NUMBER TO DENOTE .035" TUBE WALL.
ADD "B" AFTER DASH NUMBER TO DENOTE .049" TUBE WALL.
ADD "C" AFTER DASH NUMBER TO DENOTE .058" TUBE WALL.
ADD "D" AFTER DASH NUMBER TO DENOTE .065" TUBE WALL.
ADD "E" AFTER DASH NUMBER TO DENOTE .072" TUBE WALL.
ADD "F" AFTER DASH NUMBER TO DENOTE .095" TUBE WALL.
ADD "G" AFTER DASH NUMBER TO DENOTE .109" TUBE WALL.
ADD "H" AFTER DASH NUMBER TO DENOTE .120" TUBE WALL
ADD "J" AFTER DASH NUMBER TO DENOTE .134" TUBE WALL.
ADD "K" AFTER DASH NUMBER TO DENOTE .156" TUBE WALL.
ADD "L" AFTER DASH NUMBER TO DENOTE .188" TUBE WALL.

MATERIAL: SEE PROCUREMENT SPECIFICATION.
CORROSION RESISTANT STEEL (CLASS 316), CODE "K"

FINISH: SURFACE SHALL BE 125 RMS MAXIMUM PER ANSI B46.1 UNLESS OTHERWISE SPECIFIED.

NOTES:

1. REMOVE BURRS AND SLIVERS. BREAK SHARP EDGES UNLESS OTHERWISE NOTED.
2. DIMENSIONS IN INCHES. UNLESS OTHERWISE SPECIFIED, TOLERANCE DECIMALS ±.016.
3. FOR DESIGN FEATURE PURPOSES, THIS DRAWING TAKES PRECEDENCE OVER PROCUREMENT DOCUMENTS REFERENCED HEREIN.
4. REFERENCED DOCUMENTS SHALL BE OF THE ISSUE IN EFFECT ON THE DATE OF INVITATION FOR BID.
5. MARKING OF FITTINGS SHALL BE CONSISTANT WITH PROCUREMENT SPECIFICATION USING APPLICABLE KC STANDARD AND PART NUMBER DESIGNATIONS AS SHOWN ON THIS DRAWING.
6. ALL DIAMETRAL DIMENSIONS SHALL BE CONCENTRIC WITH "C" BORE WITHIN .005 T.I.R.
7. FITTINGS PROVIDED HEREIN SHALL BE WELDED TO CORRESPONDING TUBE SIZES USING AUTOMATIC WELDING EQUIPMENT (ASTRO-ARC CO. OR EQUIVALENT).

B. FOR TUBE SIZES UP TO AND INCLUDING .375" OD, TOLERANCE IS ±2-1/2°. FOR ALL OTHERS, TOLERANCE IS ±1-1/2°.

EXAMPLE OF PART NOS. KC147K4A = ELBOW, 90° BUTTWELD TUBE, FOR .250" X .035 WALL TUBING.

REVISED: ○

APPROVED: 5-1-90

CUSTODIAN: JOHN F. KENNEDY SPACE CENTER		
PROCUREMENT SPEC. KSC-F-124	ELBOW, 90° BUTTWELD TUBE	STANDARD PART
COORDINATION STATUS		KC147
KSC DE		SHEET 1 OF 2

KSC FORM 32-85 (CG 4/92)

FED SUP CLASS
4730

DASH NO.	TUBE SIZE REF	A ±.003	B +.005 -.000	C ±.003	D +.005 -.000	E ±.003	F ±.005	G ±.005	H +.015 -.005	J (REF)	K ±.016	L (REF)	M (REF)	R ±.005
K4A	¼" X .035	.285	.255	.172	.258	.297	.350	.385	.656	.680	.920	15	.438	.030
K6A	⅜" X .035	.410	.380	.297	.383	.428	.350	.385	.718	.742	1.110	15	.563	.030
K6C	⅜" X .058	.410	.380	.251	.383	.428	.350	.385	.718	.742	1.110	15	.563	.030
K8B	½" X .049	.546	.506	.393	.509	.554	.350	.385	.780	.812	1.280	15	.750	.030
K8E	½" X .072	.546	.506	.347	.509	.554	.350	.385	.780	.812	1.280	15	.750	.030
K12D	¾" X .065	.816	.756	.611	.759	.804	.500	.535	.868	.909	1.640	15	1.063	.030
K12G	¾" X .109	.816	.756	.523	.759	.804	.500	.535	.868	.909	1.640	15	1.063	.030
K16F	1" X .095	1.066	1.006	.801	1.009	1.054	.500	.535	.868	.909	1.810	15	1.313	.030
K16H	1" X .120	1.066	1.006	.751	1.009	1.054	.500	.535	.868	.909	1.810	15	1.313	.030
K20B	1¼" X .049	1.330	1.256	1.143	1.259	1.304	.500	.535	.930	1.036	2.090	30	1.625	.060
K20J	1¼" X .134	1.330	1.256	.973	1.259	1.304	.500	.535	.930	1.036	2.090	30	1.625	.060
K24B	1½" X .049	1.605	1.511	1.398	1.514	1.559	.500	.535	.930	1.034	2.280	30	1.875	.060
K24J	1½" X .134	1.605	1.511	1.218	1.514	1.559	.500	.535	.930	1.034	2.280	30	1.875	.060
K24K	1½" X .156	1.605	1.511	1.174	1.514	1.559	.500	.535	.930	1.034	2.280	30	1.875	.060
K24L	1½" X .188	1.605	1.511	1.120	1.514	1.559	.500	.535	.930	1.034	2.280	30	1.875	.060
K32D	2" X .065	2.105	2.011	1.866	2.014	2.059	.500	.535	1.055	1.298	3.060	45	2.500	.375
K32L	2" X .188	2.105	2.011	1.620	2.014	2.059	.500	.535	1.055	1.298	3.060	45	2.500	.375

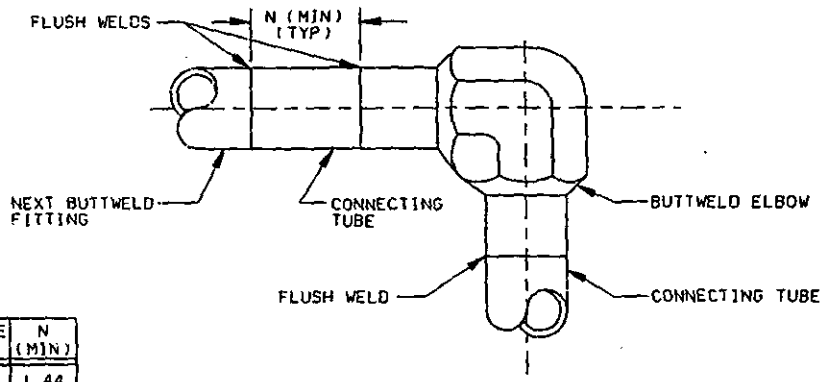

TUBE SIZE REF	N (MIN)
¼"	1.44
⅜"	1.44
½"	1.44
¾"	1.44
1"	1.44
1¼"	1.63
1½"	1.63
2" X .065	1.75
2" X .188	4.25

BUTTWELD ELBOW
APPLICATION DATA

REVISED: ○

APPROVED: 5-1-90

CUSTODIAN: JOHN F. KENNEDY SPACE CENTER

PROCUREMENT SPEC. KSC-F-124

COORDINATION STATUS KSC DE

ELBOW, 90° BUTTWELD TUBE

STANDARD PART

KC147

SHEET 2 OF 2

KSC FORM 32-85 (CG 4/92)

NOTICE: WHEN GOVERNMENT DRAWINGS, SPECIFICATIONS OR OTHER DATA ARE USED FOR ANY PURPOSE OTHER THAN IN CONNECTION WITH A DEFINITELY RELATED GOVERNMENT PROCUREMENT OPERATION, THE UNITED STATES GOVERNMENT THEREBY INCURS NO RESPONSIBILITY NOR ANY OBLIGATION WHATSOEVER AND THE FACT THAT THE GOVERNMENT MAY HAVE FORMULATED, FURNISHED, OR IN ANY WAY SUPPLIED THE SAID DRAWINGS, SPECIFICATIONS, OR OTHER DATA IS NOT REGARDED BY IMPLICATION OR OTHERWISE AS IN ANY MANNER LICENSING THE HOLDER OR ANY OTHER PERSON OR CORPORATION, OR CONVEYING ANY RIGHTS OR PERMISSION TO MANUFACTURE, USE, OR SELL ANY PATENTED INVENTION THAT MAY IN ANY WAY BE RELATED THERETO.