NOTICE: WHEN GOVERNMENT DRAWINGS, SPECIFICATIONS OR OTHER DATA ARE USED FOR ANY PURPOSE OTHER THAN IN CONNECTION WITH A DEFINITELY RELATED GOVERNMENT PROCUREMENT OPERATION, THE UNITED STATES GOVERNMENT THEREBY INCURS NO RESPONSIBILITY NOR ANY OBLIGATION WHATSOEVER AND THE FACT THAT THE GOVERNMENT MAY HAVE FORMULATED, FURNISHED, OR IN ANY WAY SUPPLIED THE SAID DRAWINGS, SPECIFICATIONS, OR OTHER DATA IS NOT REGARDED BY IMPLICATION OR OTHERWISE AS IN ANY MANNER LICENSING THE HOLDER OR ANY OTHER PERSON OR CORPORATION, OR CONVEYING ANY RIGHTS OR PERMISSION TO MANUFACTURE, USE, OR SELL ANY PATENTED INVENTION THAT MAY IN ANY WAY BE RELATED THERETO.

FED SUP CLASS
4730

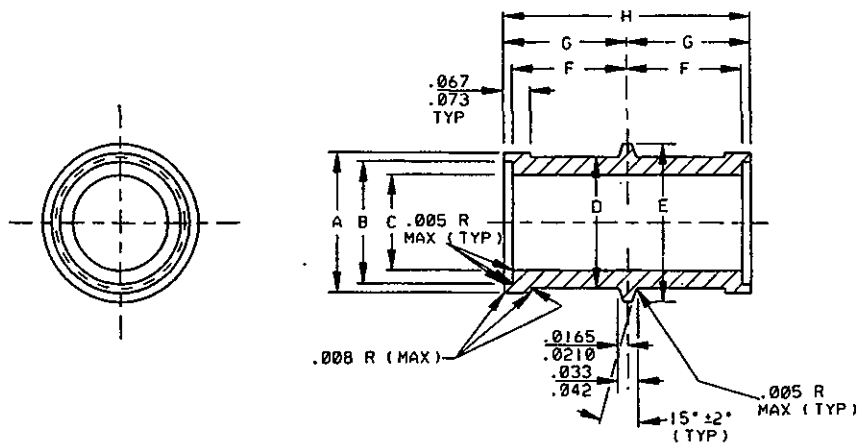

SCHEDULE:

ADD "A" AFTER DASH NUMBER TO DENOTE .035" TUBE WALL.
ADD "B" AFTER DASH NUMBER TO DENOTE .049" TUBE WALL.
ADD "C" AFTER DASH NUMBER TO DENOTE .058" TUBE WALL.
ADD "D" AFTER DASH NUMBER TO DENOTE .065" TUBE WALL.
ADD "E" AFTER DASH NUMBER TO DENOTE .072" TUBE WALL.
ADD "F" AFTER DASH NUMBER TO DENOTE .095" TUBE WALL.
ADD "G" AFTER DASH NUMBER TO DENOTE .109" TUBE WALL.
ADD "H" AFTER DASH NUMBER TO DENOTE .120" TUBE WALL
ADD "J" AFTER DASH NUMBER TO DENOTE .134" TUBE WALL.
ADD "K" AFTER DASH NUMBER TO DENOTE .156" TUBE WALL.
ADD "L" AFTER DASH NUMBER TO DENOTE .188" TUBE WALL.

MATERIAL: SEE PROCUREMENT SPECIFICATION.
CORROSION RESISTANT STEEL (CLASS 316), CODE "K"

FINISH: SURFACE SHALL BE 125 RMS MAXIMUM PER ANSI B46.1 UNLESS OTHERWISE SPECIFIED.

NOTES:

1. REMOVE BURRS AND SLIVERS. BREAK SHARP EDGES UNLESS OTHERWISE NOTED.
2. DIMENSIONS IN INCHES. UNLESS OTHERWISE SPECIFIED, TOLERANCE DECIMALS ±.016.
3. FOR DESIGN FEATURE PURPOSES, THIS DRAWING TAKES PRECEDENCE OVER PROCUREMENT DOCUMENTS REFERENCED HEREIN.
4. REFERENCED DOCUMENTS SHALL BE OF THE ISSUE IN EFFECT ON THE DATE OF INVITATION FOR BID.
5. MARKING OF FITTINGS SHALL BE CONSISTANT WITH PROCUREMENT SPECIFICATION USING APPLICABLE KC STANDARD AND PART NUMBER DESIGNATIONS AS SHOWN ON THIS DRAWING.
6. ALL DIAMETRAL DIMENSIONS SHALL BE CONCENTRIC WITH "C" BORE WITHIN .005 T.I.R.
7. FITTINGS PROVIDED HEREIN SHALL BE WELDED TO CORRESPONDING TUBE SIZES USING AUTOMATIC WELDING EQUIPMENT (ASTRO-ARC CO. OR EQUIVALENT).

EXAMPLE OF PART NOS. KC146K4A = UNION, BUTTWELD TUBE, FOR ¼" X .035 WALL TUBING.

REVISED:

APPROVED: 5-1-90

CUSTODIAN: JOHN F. KENNEDY SPACE CENTER		
PROCUREMENT SPEC. KSC-F-124	UNION, BUTTWELD TUBE	STANDARD PART
COORDINATION STATUS		KC146
KSC DE		SHEET 1 OF 2

KSC FORM 32-85 (CG 4/92)

FED SUP CLASS 4730

DASH NO.	TUBE SIZE REF	A ±.003	B +.005 -.000	C ±.003	D +.005 -.000	E ±.003	F ±.005	G ±.005	H (REF)
K4A	¼" X .035	.285	.255	.172	.258	.297	.350	.385	.770
K6A	⅜" X .035	.410	.380	.297	.383	.428	.350	.385	.770
K6C	⅜" X .058	.410	.380	.251	.383	.428	.350	.385	.770
K8B	½" X .049	.546	.506	.393	.509	.554	.350	.385	.770
K8E	½" X .072	.546	.506	.347	.509	.554	.350	.385	.770
K12D	¾" X .065	.816	.756	.611	.759	.804	.500	.535	1.070
K12G	¾" X .109	.816	.756	.523	.759	.804	.500	.535	1.070
K16F	1" X .095	1.066	1.006	.801	1.009	1.054	.500	.535	1.070
K16H	1" X .120	1.066	1.006	.751	1.009	1.054	.500	.535	1.070
K20B	1¼" X .049	1.330	1.256	1.143	1.259	1.304	.500	.535	1.070
K20J	1¼" X .134	1.330	1.256	.973	1.259	1.304	.500	.535	1.070
K24B	1½" X .049	1.605	1.511	1.398	1.514	1.559	.500	.535	1.070
K24J	1½" X .134	1.605	1.511	1.218	1.514	1.559	.500	.535	1.070
K24K	1½" X .156	1.605	1.511	1.174	1.514	1.559	.500	.535	1.070
K24L	1½" X .188	1.605	1.511	1.120	1.514	1.559	.500	.535	1.070
K32D	2" X .065	2.105	2.011	1.866	2.014	2.059	.500	.535	1.070
K32L	2" X .188	2.105	2.011	1.620	2.014	2.059	.500	.535	1.070

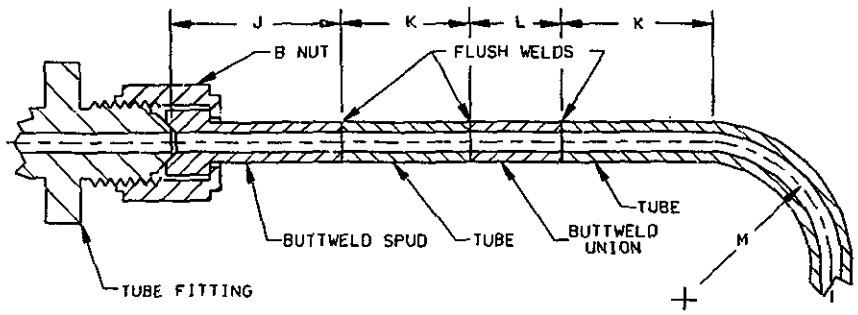

TUBE SIZE REF	J	K (MIN)	L	M (MIN)
¼"	.71	1.44	.70	.56
⅜"	.78	1.44	.70	.94
½"	.88	1.44	.70	1.25
¾"	1.12	1.44	1.00	1.75
1"	1.19	1.44	1.00	3.00
1¼"	1.22	1.63	1.00	3.75
1½"	1.31	1.63	1.00	4.50
2" X .065	1.41	1.75	1.00	6.00
2" X .188	1.41	4.25	1.00	6.00

BUTTWELD UNION
APPLICATION DATA

REVISED: ○

APPROVED: 5-1-90

CUSTODIAN: JOHN F. KENNEDY SPACE CENTER

PROCUREMENT SPEC. KSC-F-124

COORDINATION STATUS KSC DE

UNION, BUTTWELD TUBE

STANDARD PART KC146

SHEET 2 OF 2

KSC FORM 32-85 (CG 4/92)

NOTICE: WHEN GOVERNMENT DRAWINGS, SPECIFICATIONS OR OTHER DATA ARE USED FOR ANY PURPOSE OTHER THAN IN CONNECTION WITH A DEFINITELY RELATED GOVERNMENT PROCUREMENT OPERATION, THE UNITED STATES GOVERNMENT THEREBY INCURS NO RESPONSIBILITY NOR ANY OBLIGATION WHATSOEVER AND THE FACT THAT THE GOVERNMENT MAY HAVE FORMULATED, FURNISHED, OR IN ANY WAY SUPPLIED THE SAID DRAWINGS, SPECIFICATIONS, OR OTHER DATA IS NOT REGARDED BY IMPLICATION OR OTHERWISE AS IN ANY MANNER LICENSING THE HOLDER OR ANY OTHER PERSON OR CORPORATION, OR CONVEYING ANY RIGHTS OR PERMISSION TO MANUFACTURE, USE, OR SELL ANY PATENTED INVENTION THAT MAY IN ANY WAY BE RELATED THERETO.