NASA/KSC Export Control Office
EDDS #6149
Export Determination

Sensitive But Unclassified (SBU) Information: Checking the checkboxes below in regards to SBU signifies that this shipment has been reviewed under the requirements for "Sensitive But Unclassified Information" as described in NPR 1600.1.				
Box 1, K-V-011, Apollo/Saturn V, MILA Facilities Descriptions, KSC, June 30, 1965, K-V-011	Yes	No	Reviewer's Signature	Date 6/27/2006
Contains SBU?	☐	☒		

Export Control (EC):
If the document contains no EC technical data it is considered **EAR 99-NLR. (No License Required)**

Once it is determined that the document includes EC, please contact your organization's ECR or the KSC-ECO and a determination will be made for the proper export category. Your signature along with the ECR's will signify that this document has been reviewed for EC compliance under the Export Administration Regulations (EAR) and the International Traffic In Arms Regulations (ITAR).

Reviewer's Name and Organization	Reviewer's Signature	Date
William J. Collins, NASA - ECO	William J. Collins	6/27/2006

Type	Determination/ Category	Classified by NASA/KSC Export Control Office 321-867-9209
EAR NLR (Not EC)	**EAR 99, NLR**	**The information contained in the document** is technical in content, but not technical data as defined by the ITAR or the EAR and therefore is **EAR 99 NLR; no export license required. Suitable for public release.** (General Prohibition Six (Embargo) applies to all items subject to the EAR, i.e. both items on the CCL and within EAR 99 – NLR. **You may not make an export or re-export contrary to the provisions of part 746 (Embargoes and Other Special Controls) of the EAR and 22 CFR part 126.1 of the ITAR.)**
EAR Controlled		**This document is** with in the purview of the Export Administration Regulations (EAR), 15 CFR 730-774, and **is export controlled.** It may not be transferred to foreign nationals in the U.S. or abroad without specific approval of a Knowledgeable NASA export control official, and/or unless an export license/license exception is obtained/available from the Bureau of Industry and Security, United States Department of Commerce. **Violations of these regulations are punishable by fine, imprisonment, or both.**
ITAR Controlled		**This document contains information** which falls under the purview of the U.S. Munitions List (USML) as defined in the International Traffic in Arms Regulations (ITAR), 22 CFR 120-130, and **is export controlled.** It shall not be transferred to foreign nationals in the U.S. or abroad, without specific approval of a knowledgeable NASA export control official, and/or unless an export license/license exemption is obtained/available from the United States Department of State. **Violations of these regulations are punishable by fine, imprisonment, or both.**

7

NASA/KSC Export Control Office
EDDS #6149
Export Determination

From X-4
Box 1

PROPERTY OF KSC ARCHIVES
HISTORICAL MATERIAL

APOLLO/SATURN V

MILA FACILITIES DESCRIPTIONS

K-V-011

K-V-011

APOLLO/SATURN V

MILA FACILITIES DESCRIPTIONS

John F. Kennedy Space Center

Coordination Draft
June 30, 1965
Title Page

FOREWORD

This document is prepared in accordance with the requirement established by the KSC Apollo/Saturn V Document Tree, dated August 17, 1964.

The information contained herein consists of descriptions of the facilities and the ground systems required to support the Apollo/Saturn V Program. The facilities located on the Merritt Island Launch Area (MILA) are categorized by functional activity and geographical location. The operational facilities of this program are located within Launch Complex 39 and the Spacecraft Operations sector of the Merritt Island Industrial Area (MIIA). The bulk of the program support facilities is located in the KSC sector of MIIA. Other program support facilities are individually sited throughout MILA in locations which serve specific needs of the program.

This document is divided into seven sections. These sections describe Launch Complex 39 facilities; ground systems required to support the pre-launch and flight operation; spacecraft technical facilities; administrative, engineering, and logistic type facilities; those facilities on MILA which support the Apollo/Saturn V Program but which are not identified with a specific geographic location, such as LC39 or MIIA; and a few of the several ETR systems which have an interface with MILA operation. The last section consists of an index which provides information such as project number, design criteria, construction specifications, and drawing number.

Launch Complex 39 is constructed to launch Apollo/Saturn V space vehicles. The facilities of this complex are based on the mobile launch concept. In this concept the Apollo/Saturn V space vehicle is transported to the launch pad following

mating and checkout in the Vehicle Assembly Building. Prior to the space vehicle transfer to the launch pad, the receipt, assembly and checkout of the launch vehicle and spacecraft is accomplished at the VAB and MSO Building. Consequently, the mobile concept permits a launch pad cycle of 22 days. See K-PM-0, Apollo/Saturn V Development/Operations Plan, Volume II. By contrast, in the fixed-pad concept, the launch pad is occupied for several weeks before vehicle launch because all assembly and checkout is accomplished at the pad. The mobile concept permits a high launch rate with a corresponding decrease in investment of operational pad facilities. Another important advantage of the mobile concept incorporated in Launch Complex 39 is the ability to expand facilities with minimum interruption of the launch schedule.

TABLE OF CONTENTS

MILA APOLLO/SATURN V FACILITIES DESCRIPTION

SECTION	TITLE	PAGE
1.0	LAUNCH COMPLEX 39	1-1
1.1	Vehicle Assembly Building	1-1
1.2	Barge Terminal	1-11
1.3	Launch Control Center	1-11
1.4	Utility Annex	1-16
1.5	Sewage Treatment Plants	1-16
1.6	Paint and Oil Storage Building	1-18
1.7	Launch Equipment Shop	1-18
1.8	Ordnance Storage Area	1-22
1.9	Mobile Launcher	1-26
1.10	Mobile Launcher Refurbish Area	1-31
1.11	Crawler/Transporter	1-33
1.12	Crawlerway	1-44
1.13	Mobile Servicing Structure	1-46
1.14	HP Gas Facility	1-49
1.15	Launch Pad	1-59
1.16	Propellant Facilities	1-66
1.17	Operations Support Buildings	1-75
1.18	Flame Deflector	1-78
1.19	Azimuth Alignment Building	1-79
1.20	Launch Area Camera Sites	1-81
1.21	Instrumentation Building	1-82

SECTION	TITLE	PAGE
2.0	LAUNCH COMPLEX 39 SUPPORT SYSTEMS	2-1
2.1	Operational Intercom System	2-1
2.2	Operational Paging System	2-2
2.3	Operational Television	2-4
2.4	Water System	2-6
2.5	Electric Power System	2-26
2.6	Heating, Ventilating, and Air Conditioning System	2-46
2.7	Elevators	2-46
2.8	Fire Alarm and Protection System	2-46
2.9	Area Warning System	2-52
2.10	Pneumatics System	2-53
2.11	Hazards Monitoring System	2-57
2.12	High Intensity Lighting System	2-60
2.13	Meteorological and Lightning Prediction	2-63
2.14	Complex 39 Launch Area Camera System	2-70
2.15	Compressed Air Systems	2-73
2.16	Emergency Ingress/Egress and Escape System	2-81
2.17	Propellants Systems	2-83
2.18	Central Computer Complex	2-84
2.19	Data Display System	2-87
2.20	Ground Telemetry System	2-92
2.21	MILA Timing and Launch Countdown System	2-97
2.22	Launch Environmental Measuring System	2-100
2.23	UDOP-ODOP	2-110
2.24	Flight TV Monitor System	2-115
2.25	Complex Control Center	2-119

SECTION	TITLE	PAGE
3.0	SPACECRAFT OPERATIONS AND CHECKOUT AREA	3-1
3.1	Manned Spacecraft Operations Building	3-1
3.2	Spacecraft, Spares and Equipment Buildings	3-6
3.3	Parachute Building	3-6
3.4	RF Systems Test	3-6
3.5	Ordnance Field Test Laboratory	3-10
3.6	Ordnance Storage Building	3-10
3.7	Pyrotechnic Installation Building	3-13
3.8	Flight Crew Training Buildings	3-13
3.9	Life Support Test Building	3-17
3.10	Hypergolic Test Building	3-19
3.11	Cryogenic Test Building	3-19
3.12	Fluid Test Support Building	3-21
3.13	Propulsion Test Facility (Spacecraft)	3-21
4.0	ADMINISTRATIVE, ENGINEERING AND GENERAL INDUSTRIAL AREA	4-1
4.1	Central Instrumentation Facility	4-1
4.2	Communications Distribution and Switching Center	4-5
4.3	Vehicle Maintenance Facility	4-8
4.4	Plant Maintenance Facility	4-9
4.5	MIIA Heat Plant	4-11
4.6	MIIA Sewage Treatment Plant	4-13
4.7	MIIA Water System	4-13
4.8	MIIA Electrical Power System	4-16
4.9	Fire Station	4-17
4.10	Railroad System	4-17

SECTION	TITLE	PAGE
5.0	MERRITT ISLAND LAUNCH AREA - OTHER	5-1
5.1	Universal Camera Sites	5-1
5.2	Trailer Maintenance Facility	5-5
5.3	Propellant Systems Components Laboratory	5-8
5.4	Propellant Transporter Cleaning Facility	5-10
6.0	EASTERN TEST RANGE SYSTEMS	6-1
6.1	RF Systems	6-1
6.2	AFETR Telemetry Station (Tel IV)	6-1
6.3	Frequency Control and Analysis System	6-4
7.0	FACILITIES REFERENCE MATERIAL INDEX	7-1

LIST OF ILLUSTRATIONS*

FIGURE	TITLE	PAGE
1.0-1	Launch Complex 39 (Concept) 105-KSC-64C-3787	1-2
1.0-2	Vehicle Assembly Building Area (Concept) 114-KSC-65C-2677	1-3
1.0-3	Vehicle Assembly Building 100-KSC-65C-3016	1-4
1.0-4	Vehicle Assembly Building - Low Bay 100-KSC-65C-2985	1-6
1.0-5	Vehicle Assembly Building - High Bay East Elevation 100-KSC-65C-2777	1-8
1.0-6	Vehicle Assembly Building - High Bay North Elevation 100-KSC-65C-3012	1-9
1.0-7	Vehicle Assembly Area - Barge Terminal 100-KSC-65-11601	1-12
1.0-8	Launch Control Center 100-KSC-65C-1440	1-14
1.0-9	Utility Annex 100-KSC-65-11588	1-17
1.0-10	VAB Area Sewage Treatment Plant 100-KSC-65-11593	1-19
1.0-11	Pad Area Sewage Treatment Plant 100-KSC-65-11597	1-20
1.0-12	Paint and Oil Storage Building 100-KSC-65-11589	1-21
1.0-13	Launch Equipment Shop 100-KSC-65-11586	1-23
1.0-14	LC-39 Ordnance Storage Magazine 100-KSC-65-11604	1-24
1.0-15	LC-39 Ordnance Storage Receiving & Inspection Building 100-KSC-65-11600	1-25
1.0-16	Mobile Launcher at Refurbish Area 100-KSC-65C-1442	1-27

*Number below illustration refers to KSC Photograph File Number.

FIGURE	TITLE	PAGE
1.0-17	Mobile Launcher Hammerhead Crane 100-KSC-65C-3324	1-29
1.0-18	Crawler Transporter 105-KSC-65C-7560	1-35
1.0-19	Crawler Transporter - Truck 105-KSC-64C-3341	1-37
1.0-20	CT - Electrical Power System	1-39
1.0-21	CT - Single Line Propulsion System Schematic	1-40
1.0-22	CT - Hydraulic System	1-42
1.0-23	Crawlerway Looking West 100-KSC-65C-1438	1-45
1.0-24	Mobile Servicing Structure (Concept) -KSC-64C-636	1-47
1.0-25	High Pressure Gas Facility - Converter Compressor (Concept) LOC-63C-1800	1-51
1.0-26	Converter Compressor Facility 100-KSC-65-11599	1-52
1.0-27	Converter Compressor Facility Railroad Siding 100-KSC-65C-2919	1-53
1.0-28	High Pressure Gas Facility - VAB Area (Concept) LOC-63C-1784	1-55
1.0-29	High Pressure Gas Facility - Launch Pad Area (Concept) LOC-63C-1785	1-56
1.0-30	LC-39 Launch Area A (Concept) 105-KSC-64C-4539	1-60
1.0-31	LC-39 Pad A - Exploded View (Concept) 107-KSC-64C-3367	1-61
1.0-32	LC-39 Pad Looking South 100-KSC-65C-3018	1-62
1.0-33	LC-39 Pad A Looking West 100-KSC-65C-2304	1-63
1.0-34	LC-39 Air Intake Building 100-KSC-65-11596	1-67

FIGURE	TITLE	PAGE
1.0-35	LC-39 RP-1 Storage Facility (Concept) 107-KSC-64C-1553	1-69
1.0-36	LC-39 RP-1 Storage Facility 100-KSC-65-11592	1-70
1.0-37	LC-39 LH_2 Storage Facility (Concept) 107-KSC-64C-1558	1-71
1.0-38	LC-39 LH_2 Storage Facility 100-KSC-65-11591	1-72
1.0-39	LC-39 LOX Storage Facility (Concept) LOC-63C-1802	1-73
1.0-40	LC-39 LOX Storage Facility 100-KSC-65-11594	1-74
1.0-41	LC-39 RP-1 Holding Pond 100-KSC-65C-2325	1-76
1.0-42	LC-39 Gaseous Hydrogen Burn Pond LOC-63C-1790	1-77
1.0-43	Azimuth Alignment Building 100-KSC-65-11598	1-80
1.0-44	VAB Area Instrumentation Building and Antenna 100-KSC-65-11587	1-83
2.0-1	Block Diagram OTV Distribution	2-5
2.0-2	VAB Area Distribution LC-39 Water System	2-7
2.0-3	Utility Annex, LC-39 Water System	2-10
2.0-4	VAB Distribution LC-39 Water System	2-12
2.0-5	Crawlerway Distribution LC-39 Water System	2-15
2.0-6	Pad Pumping Station LC-39 Water System	2-16
2.0-7	Pad Area Distribution LC-39 Water System	2-18
2.0-8	Pad Valve & Tank Area LC-39 Water System	2-20
2.0-9	Block Diagram 69KV Substation and 13.8KV Power Distribution System	2-28

FIGURE	TITLE	PAGE
2.0-10	Power Distribution System Complex 39	2-29
2.0-11	Utility Annex Industrial & Instrumentation Power Distribution	2-30
2.0-12	VAB Vicinity Emergency Power Distribution	2-32
2.0-13	VAB Industrial and Instrumentation Power Distribution	2-33
2.0-14	Instrumentation Building Power Distribution	2-37
2.0-15	Switching Station 1A and CCF Power Distribution	2-38
2.0-16	Switching Station 1, Industrial and Instrumentation Power Distribution	2-40
2.0-17	Switching Station 2 & Launch Pad "A" Industrial and Instrumentation Power Distribution	2-41
2.0-18	Pad Area Emergency Power Distribution	2-43
2.0-19	Mobile Launcher Power Distribution	2-45
2.0-20	Mobile Servicing Structure Power Distribution	2-47
2.0-21	Complex 39 Fire Alarm System	2-49
2.0-22	Pneumatic Supply System	2-54
2.0-23	Complex 39 Meteorological Measuring System	2-64
2.0-24	Functional Diagram ETR Meteorological System	2-66
2.0-25	Pad Compressed Air System	2-74
2.0-26	Mobile Launcher Compressed Air System	2-75
2.0-27	Mobile Servicing Structure Compressed Air System	2-76
2.0-28	Pad Water Pumping Station Compressed Air System	2-77
2.0-29	VAB Plant Air System	2-79
2.0-30	Utility Annex Diesel Engine Start Compressed Air System	2-80
2.0-31	Functional Block Diagram Central Computer Complex	2-86
2.0-32	Block Diagram Real Time Data Display System	2-91
2.0-33	Block Diagram 1 Module in CIF Telemetry Station	2-94

FIGURE	TITLE	PAGE
2.0-34	Block Diagram Data-Core	2-95
2.0-35	Central Timing Station and Distribution from CIF	2-98
2.0-36	LCC Subcentral Timing Station and Distribution	2-101
2.0-37	MSOB Subcentral Timing Station and Distribution	2-102
2.0-38	Complex 39 Digital Data Recording System	2-104
2.0-39	Complex 39 Vibration Data Recording	2-106
2.0-40	Complex 39 Acoustic System	2-107
2.0-41	Complex 39 Safety Monitoring System	2-109
2.0-42	Typical Short Base Line ODOP System	2-112
2.0-43	UDOP System Physical Layout of a Two Receiver Configuration	2-113
2.0-44	Flight TV Monitor System Block Diagram	2-116
2.0-45	Complex Control Center Information Flow Chart	2-121
3.0-1A	Building Legend to Figure 3.0-1B	3-2
3.0-1B	Spacecraft Operations Area MIIA	3-3
3.0-2	Manned Spacecraft Operations Building 100-KSC-65C-3009	3-4
3.0-3	Manned Spacecraft Operations Building Assembly and Test Area 100-KSC-65-11576	3-5
3.0-4	Spacecraft Spares and Equipment Building 100-KSC-11577	3-7
3.0-5	Parachute Building 100-KSC-65-11579	3-8
3.0-6	RF Systems Test Range 100-KSC-65C-2987	3-9
3.0-7	Spacecraft Ordnance Field Test Laboratory 100-KSC-65C-2646	3-11
3.0-8	Spacecraft Ordnance Storage Building 100-KSC-65-11580	3-12

FIGURE	TITLE	PAGE
3.0-9	Pyrotechnic Installation Building 100-KSC-64C-3235	3-14
3.0-10	Flight Crew Training Building 100-KSC-65-11578	3-16
3.0-11	Life Support Test Building 100-KSC-65-3513	3-18
3.0-12	Spacecraft Operations Hypergolic Test Building	3-20
3.0-13	Cryogenic Test Building 100-KSC-65C-2999	3-22
3.0-14	Spacecraft Operations Fluid Test Support Building 100-KSC-65C-3000	3-23
3.0-15	Spacecraft Operations Propulsion Test Facility (LC-16) 100-KSC-65C-3004	3-24
4.0-1A	Building Legend to Figure 4.0-1B	4-2
4.0-1B	Merritt Island Industrial Area - Administrative and Support	4-3
4.0-2	Central Instrumentation Facility 100-KSC-65C-1471	4-4
4.0-3	CIF Antenna Building 100-KSC-65-11603	4-6
4.0-4	Communications Distribution and Switching Center 100-KSC-65-11585	4-7
4.0-5	Plant Maintenance Facility 100-KSC-65-5508	4-10
4.0-6	MIIA Heat Plant 100-KSC-65-11584	4-12
4.0-7	MIIA Sewage Plant 100-KSC-65-11582	4-14
4.0-8	MIIA Water Storage 100-KSC-65-11583	4-15
4.0-9	MIIA Fire Station 100-KSC-65-11581	4-18

FIGURE	TITLE	PAGE
5.0-1	Universal Camera Sites	5-2
5.0-2	Universal Camera Site Arrangement Plan	5-4
5.0-3	Typical Universal Camera Site	5-6
5.0-4	Typical Siting Criteria Cinetheodolite Camera	5-7
5.0-5	Propellant Systems Component Lab 100-KSC-65-11602	5-9
6.0-1	ETR Basic Telemetry Station Design	6-2
6.0-2	ETR Tel-IV Ground Station Block Diagram	6-3

1.0 LAUNCH COMPLEX 39

Launch Complex 39 encompasses an area on MILA that contains a variety of facilities which provide direct support to space vehicle operations. (See Figures 1.0-1 and 1.0-2). Each of the pertinent facilities is discussed in the following paragraphs.

1.1 VEHICLE ASSEMBLY BUILDING (VAB)

1.1.1 General.

1.1.1.1 Function. The Vehicle Assembly Building provides a protected environment for: the attachment of flight hardware; checkout of the Saturn V propulsion stages and Instrumentation Unit; erection of the vehicle stages and spacecraft in a vertical position on the ML; and pre-launch pad checkout of the assembled space vehicle.

1.1.1.2 Location. The VAB is located five (5) miles north of the Merritt Island Industrial Area and adjacent to Kennedy Parkway.

1.1.1.3 Description. The Vehicle Assembly Building is a totally enclosed structure approximately 525 feet high, 518 feet wide, and 716 feet long. (See Figure 1.0-3.) The principle operational elements of the VAB are the low bay area and high bay area. The high and low bay areas are separated into equal segments by a transfer aisle.

This facility is constructed of structural steel with insulated aluminum siding. Translucent fiberglass sandwich panels form a part of the wall of the North and South Elevations.

Office, laboratory, and storage areas are available in the VAB. In addition to highway and marine facilities, the VAB is served by a spur from the Florida East Coast Railway mainline.

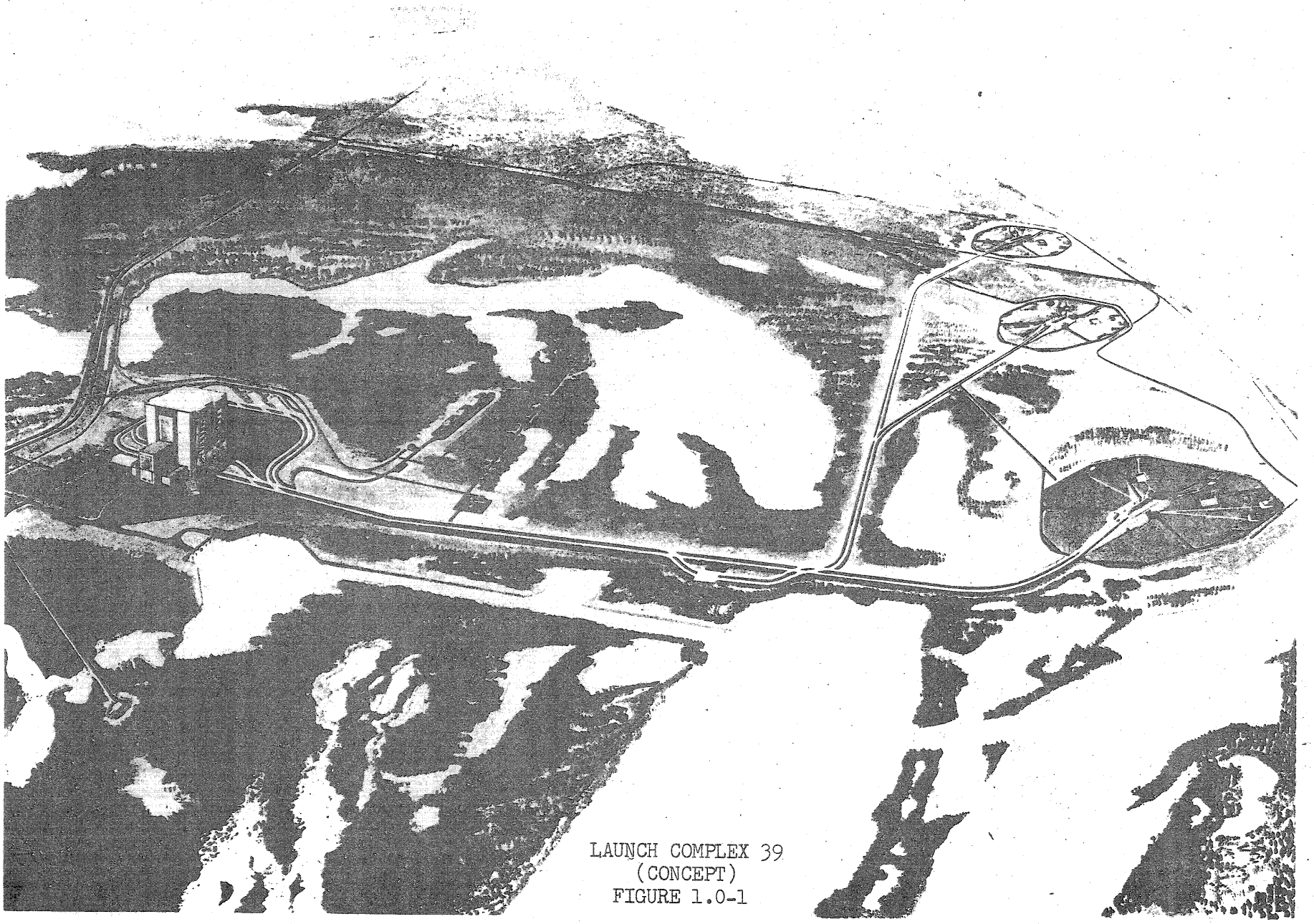

LAUNCH COMPLEX 39
(CONCEPT)
FIGURE 1.0-1

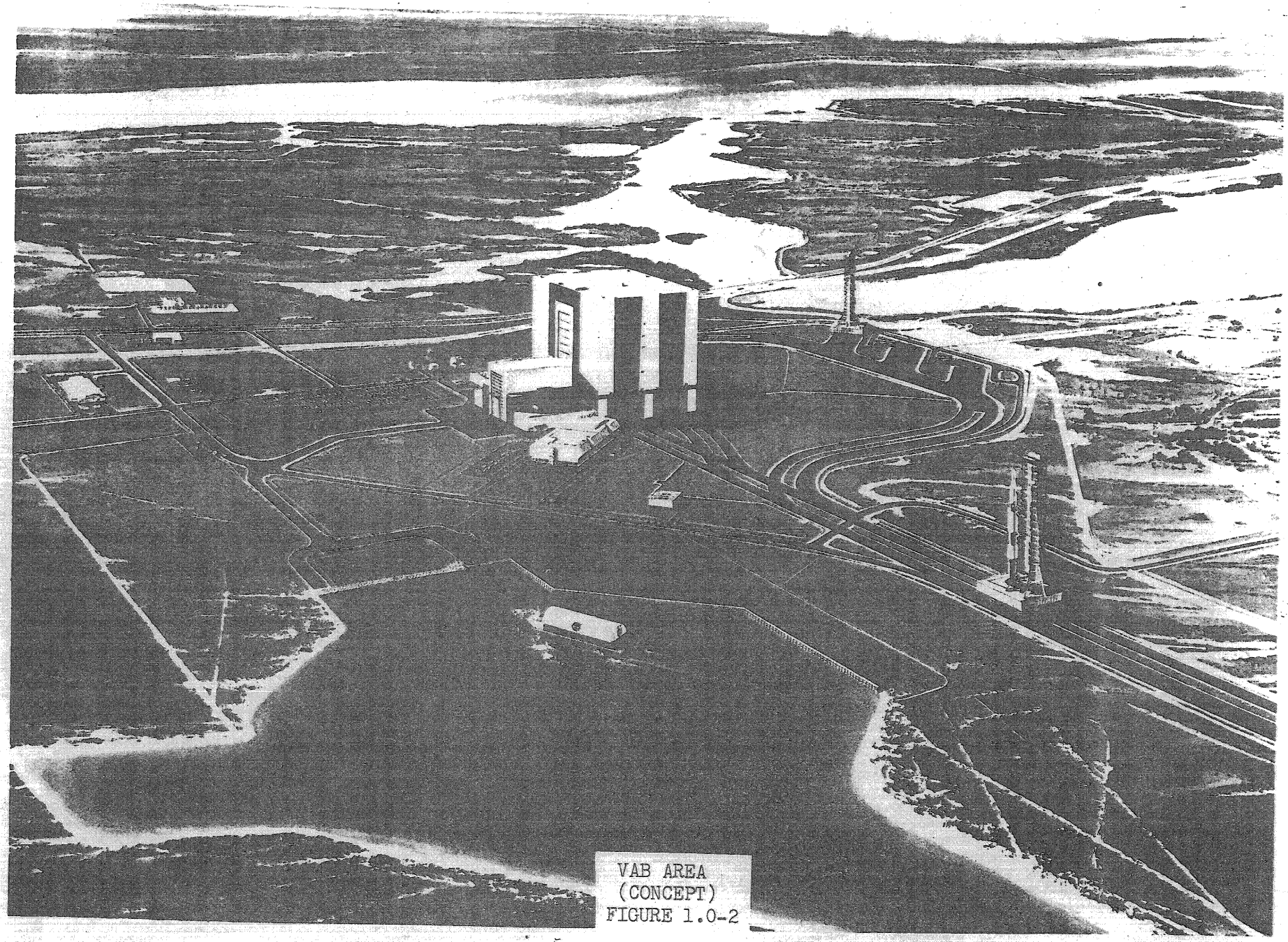

VAB AREA
(CONCEPT)
FIGURE 1.0-2

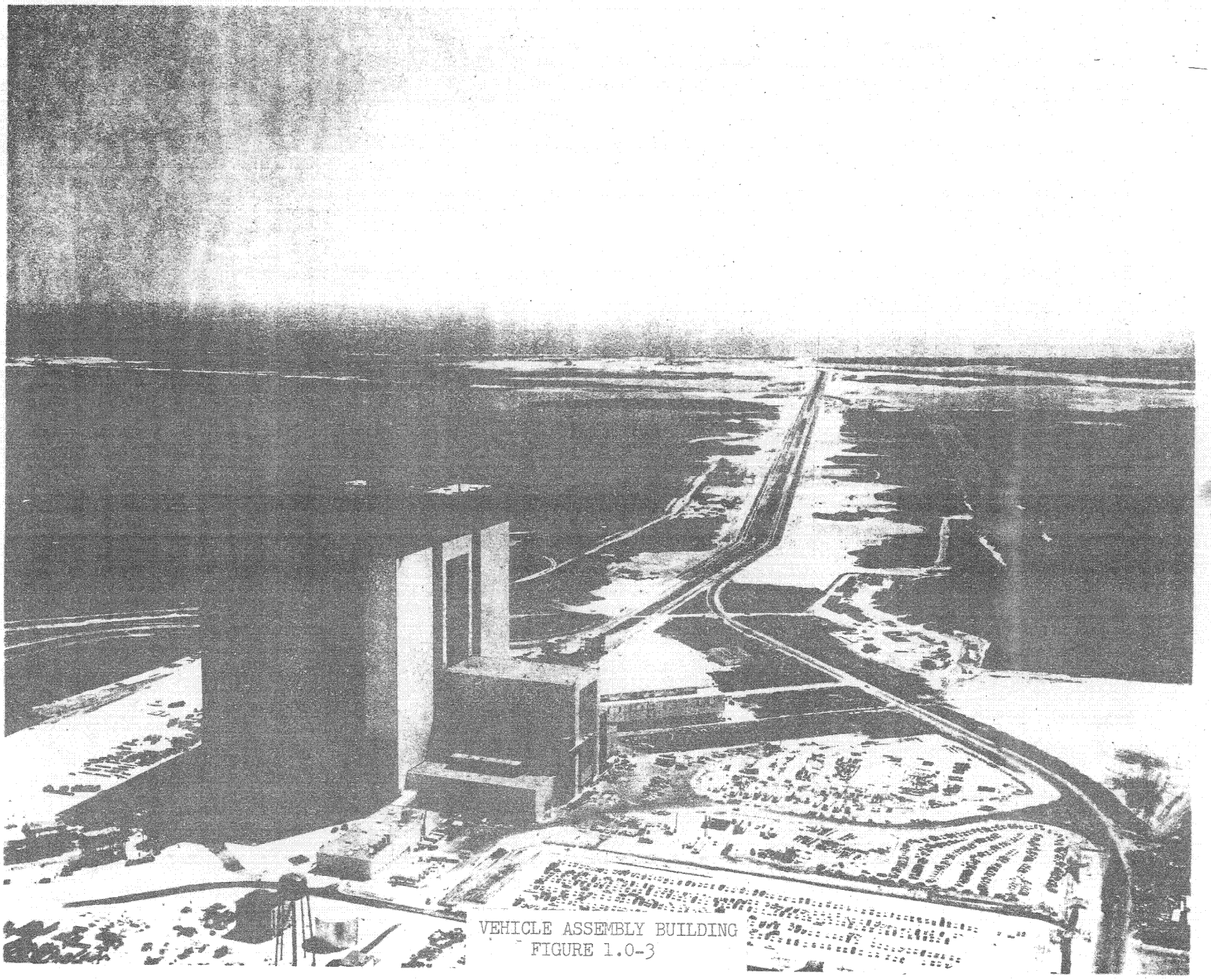

VEHICLE ASSEMBLY BUILDING
FIGURE 1.0-3

1.1.2 Low Bay Area

1.1.2.1 Function. The low bay area provides the facilities for receiving, uncrating, checkout and preparation of the S-II, S-IVB stages, and the Instrument Unit.

1.1.2.2 Location. The low bay area is located in the southern section of the Vehicle Assembly Building. (See Figure 1.0-4).

1.1.2.3 Description. The low bay area is approximately 210 feet high, 442 feet wide, and 274 feet long. There are eight stage preparation and checkout cells equipped with systems to simulate interface operations between stages and the instrumentation unit. A 175-ton bridge crane will service the transfer aisle. The hook height of the crane is 166 feet above ground floor level. This crane is used to transfer the stage from the low bay area to the high bay area. The checkout areas are of conventional, multiple-story construction.

Work platforms, made up of fixed and folded sections, fit the various stages as required. The platforms are bolted to the low bay structure to permit vertical repositioning for changes in stage configuration. Access from fixed floor levels to the work platforms is provided by stairs.

The VAB low bay area has four (4) elevators with a 57' travel at 350 feet/minute. Provision is made for operation with and without attendant using local controls. Remote monitor/control is possible by use of the equipment in the CCC elevator panel.

Transfer aisle doors are of the sliding type and motor driven. They are designed to operate in a wind velocity of 43 miles per hour steady-state and gusts up to 63 miles per hour. The doors provide an opening 55' wide and 96' high on the south end of the low bay area.

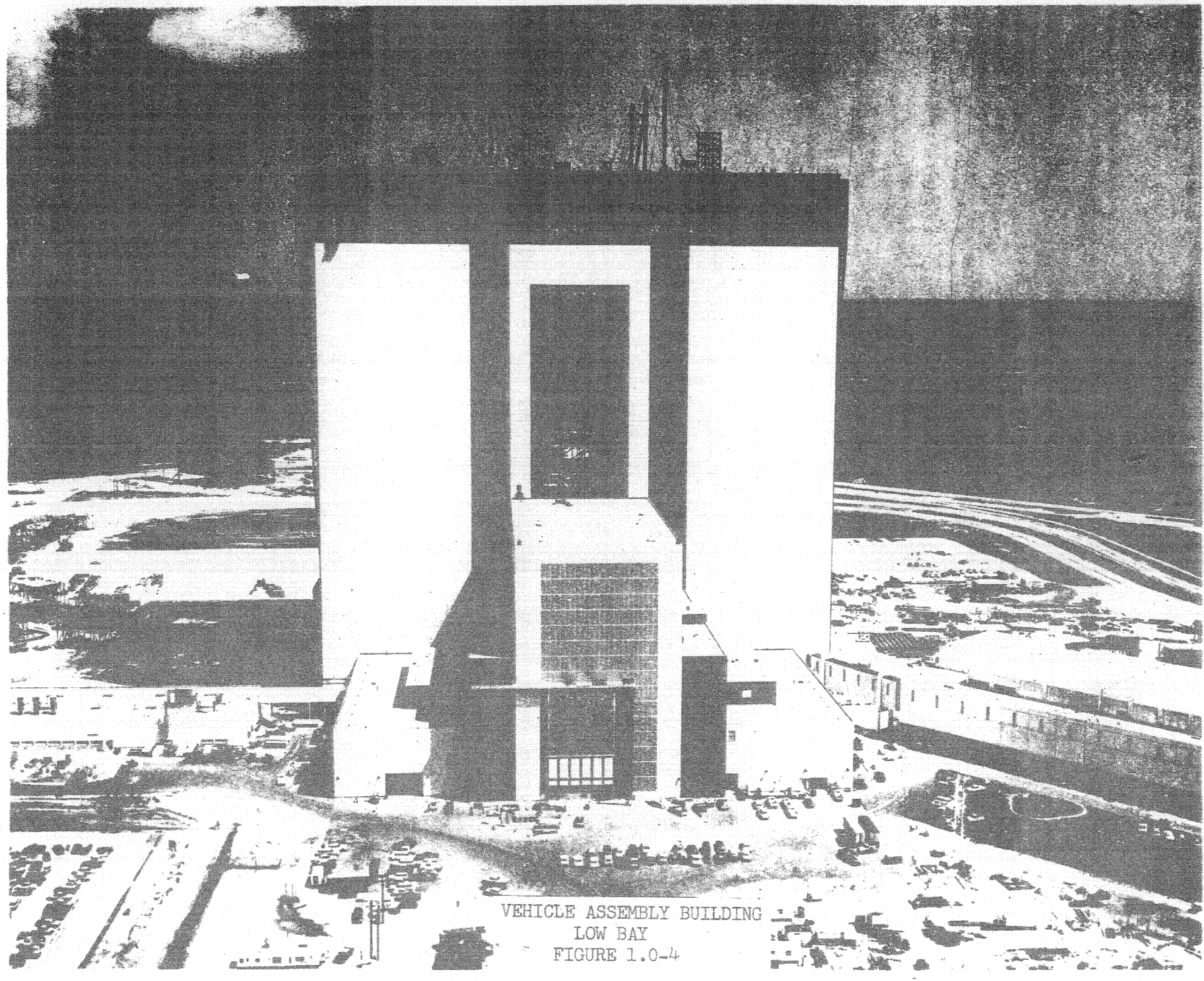

VEHICLE ASSEMBLY BUILDING
LOW BAY
FIGURE 1.0-4

The low bay check areas are ventilated only. Office and laboratory areas are maintained, in summer, to $75^{o}\pm2^{o}$FDB and 45%±5% R.H. and are heated, if necessary, to $70^{o}\pm2^{o}$ in winter.

1.1.3 High Bay Area

1.1.3.1 Function. The high bay area provides the facilities for erection and checkout of the Saturn IC; mating and integrated checkout operations of the S-II and S-IVB, Instrument Unit, and spacecraft.

1.1.3.2 Location. The high bay area is located in the northern section of the Vehicle Assembly Building. (See Figures 1.0-5 and 1.0-6.)

1.1.3.3 Description. The high bay area is approximately 525 feet high, 518 feet wide and 442 feet long. It contains four checkout bays. Expansion to six bays is possible. Access to the vehicle will be provided from air-conditioned work platforms that extend from either side of the high bay area to completely surround the various levels of the vehicle. Each platform will be composed of two bi-parting sections. These sections can be positioned in the vertical plane. The platform can be moved horizontally to within one foot of the vehicle skin and locked in that position. The floor and roof of the section will conform to and surround half of the vehicle. The periphery of the open end of the platform will consist of hollow seals to form an environmental enclosure against the vehicle.

Each pair of bays is served by a 250-ton bridge crane with a hook height of 462 feet. (A 175-ton overhead bridge crane will serve the transfer aisle between the high and low bay areas.) Each high bay has four elevators to provide personnel access to the many levels of the high bay area. The wall framing (referred to as diaphragms) has openings through which the 250-ton

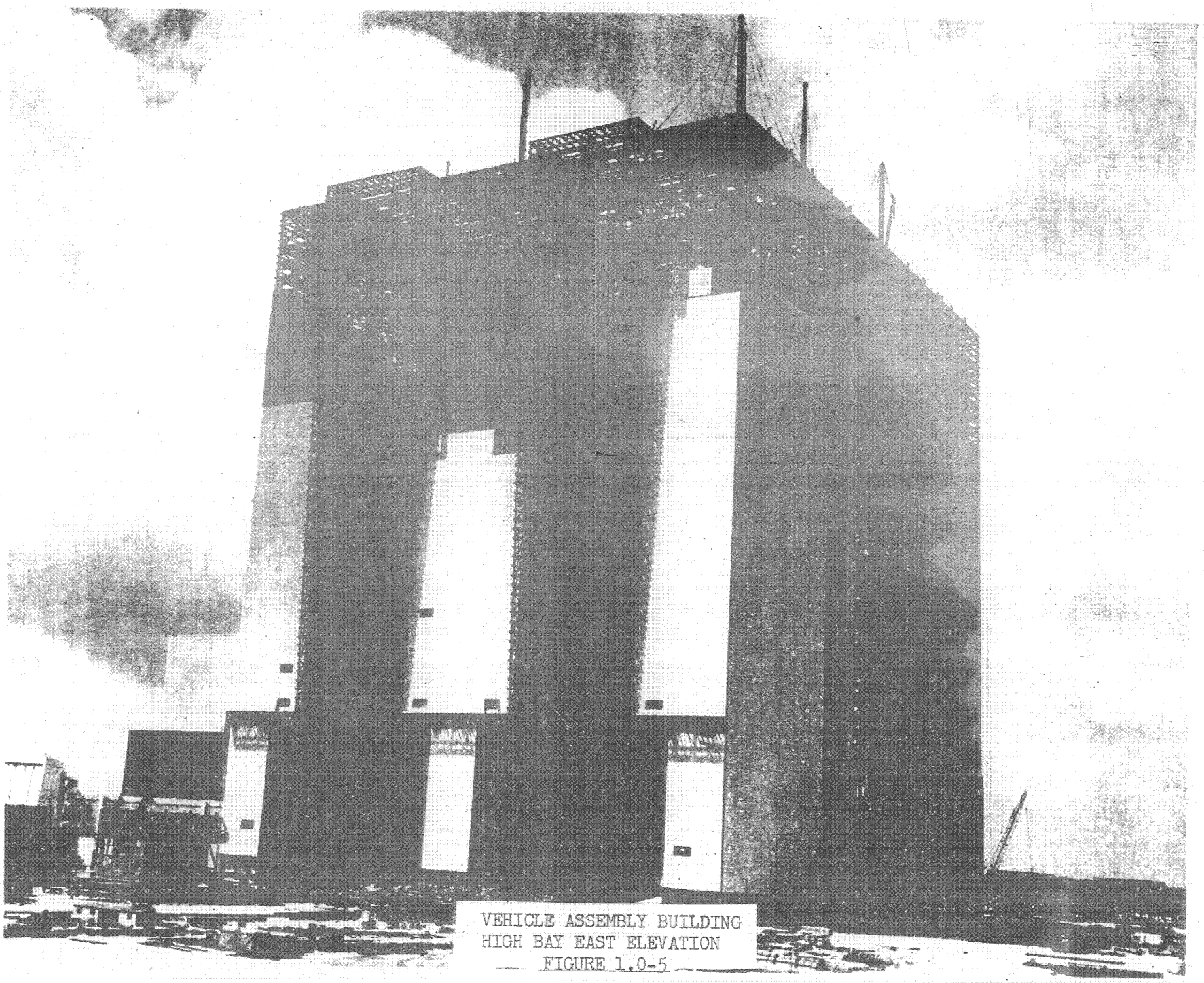

VEHICLE ASSEMBLY BUILDING
HIGH BAY EAST ELEVATION
FIGURE 1.0-5

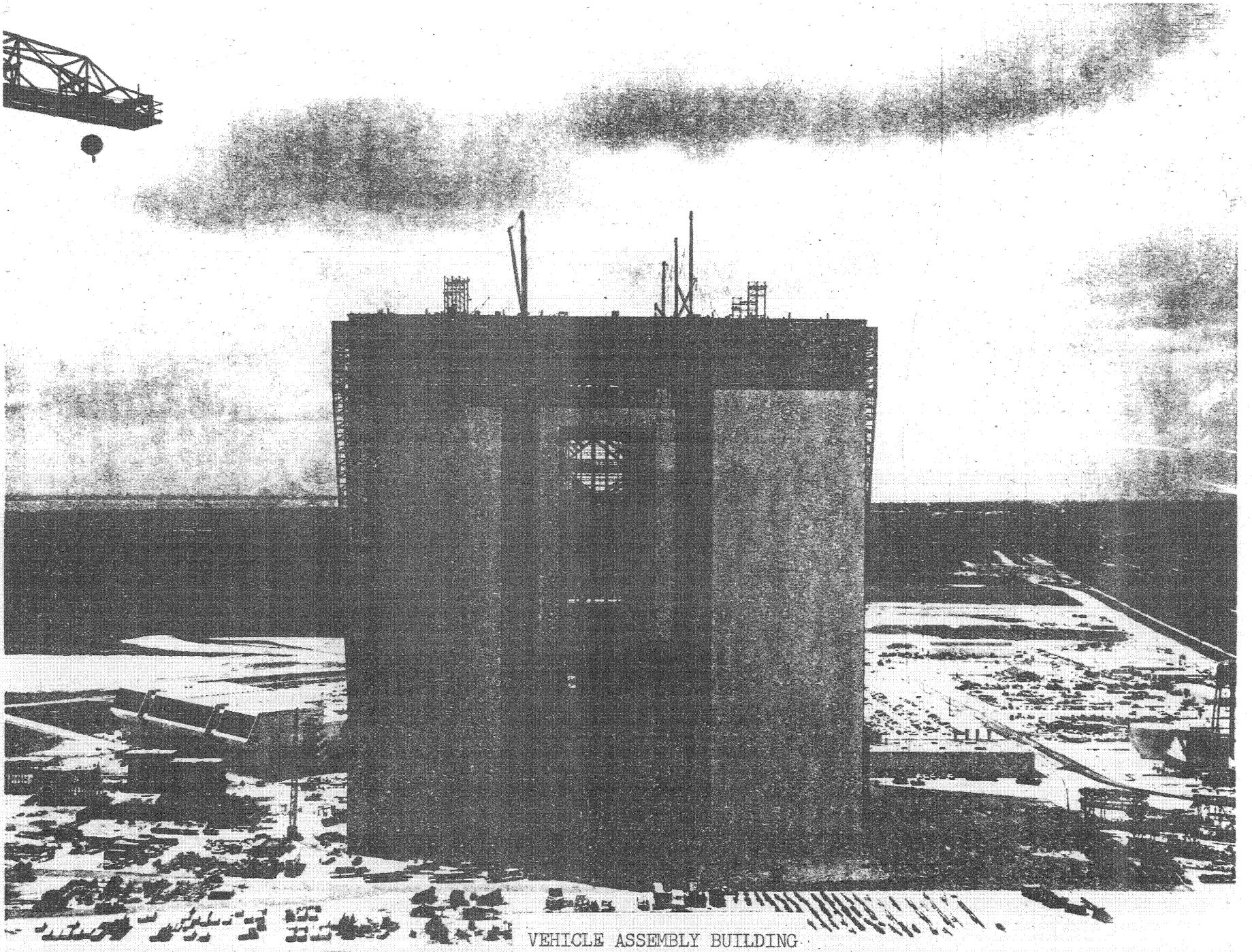

VEHICLE ASSEMBLY BUILDING
HIGH BAY NORTH ELEVATION
FIGURE 1.0-6

bridge cranes may operate. The diaphragms are slotted above the 190-foot elevation to allow for the movement of components from the transfer aisle to their assembly position on the ML.

The bay areas are ventilated and have nitrogen and helium gas concentration detection systems. Fireproof stairways will extend from ground level to the roof. The VAB high bays are provided with a total of 17 elevators. Sixteen elevators have a 419' travel at 700 feet/minute. Elevator No. 17 travels from floor 34 to the roof at 200 feet/minute. These are electric elevators with a full complement of manual and programmed automatic controls. They may be operated with or without attendant by local controls. Remote monitor/control is provided in the CCC elevator panel.

The high bay doors depict an inverted "T" with a clear opening of 456 feet in height. The bar of the "T" is 114 feet high and 152 feet wide. Above the bar of the "T", the opening is 72 feet wide and 342 feet high.

The bottom doors are four horizontally bi-parting panels on tracks, 114 feet high and 38 feet wide. Movement for each of the bottom doors is provided by a 7.5 horsepower electric motor. The upper doors comprise several leaves, 49 feet high, 76 feet wide, weighing 63,000 pounds each. Each door is moved vertically by a counter-weight system driven by a 7.5 horsepower electric motor. The high bay transfer aisle door is 55 feet wide and 57 feet high.

The high bay area is air-conditioned and/or heated by air handling units, supplied chilled or heated water from the Utility Annex, or by independent heat pumps. In the winter, the temperature is maintained at $75^{\circ} \pm 2^{\circ}$FDB and $45\% \pm 2^{\circ}$. The main open bay and corridors are ventilated at the rate of one air change per hour (ambient).

1.2 BARGE TERMINAL

1.2.1 Function. This facility provides docking space for ocean-going vessels, delivering vehicle stages (S-IC and S-II) and bulky materials to LC39.

1.2.2 Location. The facility is located in the VAB area south of Saturn Causeway. (See Figure 1.0-7.)

1.2.3 Description. The facility consists of: an access canal, running west from the upper reaches of the Banana River; a turning basin; and docks on the west and north sides of the turning basin.

The access canal is provided for marine vessels which deliver launch vehicle stages, related components and other equipment and materials to Complex 39. The turning basin is the terminal point for the barge vessels. It is 1200 feet by 1200 feet and will be maintained to a depth of 10 feet.

The dock facility is provided to receive and support barge vessels and their cargoes of launch vehicle stages, related components, equipment, and materials. The facility consists of: (1) a barge dock to off-load launch vehicle stages and heavy equipment; (2) 1250 feet of docking space around the north and west pheriphery of the basin for material unloading; and (3) a hard surfaced area around the basin from which roads lead to all major areas of the Launch Complex.

1.3 LAUNCH CONTROL CENTER

1.3.1 Function. The Launch Control Center (LCC) serves as the focal point for monitoring and control of vehicle checkout and launch activities associated with the Apollo/Saturn V Program.

1.3.2 Location. The LCC is adjacent to the VAB. The distance from this structure to the center line of Pad "A" is approximately 3.1 miles.

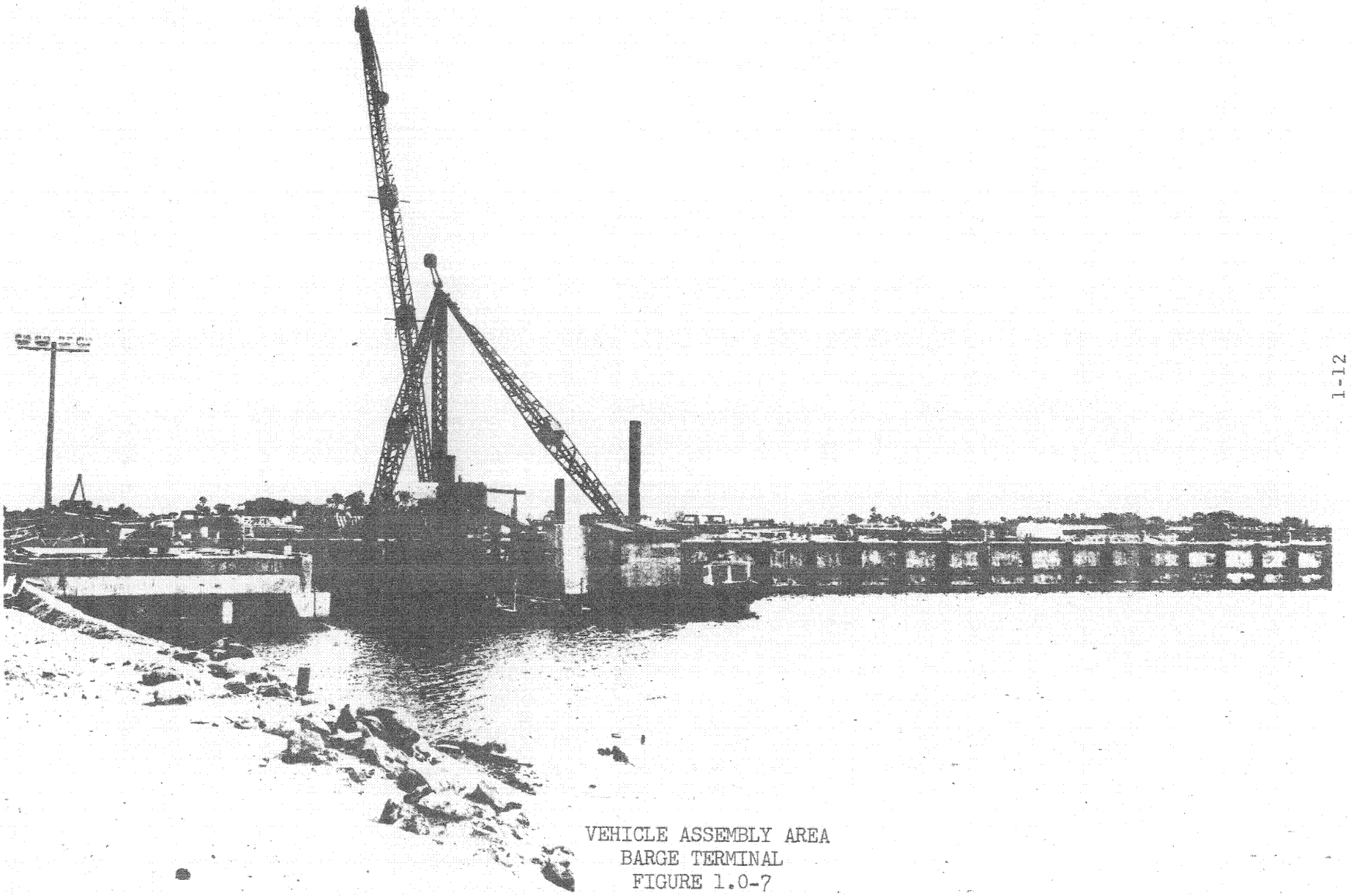

VEHICLE ASSEMBLY AREA
BARGE TERMINAL
FIGURE 1.0-7

1.3.3 Description. The Launch Control Center (Figure 1.0-8) is a permanent four-story structure. An enclosed personnel and cabling bridge connects the VAB and LCC at the third floor level. The base dimensions of the building are approximately 360 x 150 feet. The ground floor of the structure is devoted to service and support functions (i.e., medical, cafeteria, offices, shops, labs, communications, etc.). Telemetry, RF, Tracking Equipment, Instrumentation, Data Reduction and Evaluation, etc. will occupy the second floor. The third floor is divided into four separate control areas that contain the following:

a. Firing rooms.

b. Computer room.

c. Mission control room.

d. Test conductor platform areas.

e. Visitor's gallery.

f. Office.

g. Main and distribution frame rooms.

The display rooms, offices, LIEF rooms, and the mechanical equipment are located on the fourth floor. The third floor control room will have full height viewing window for observation of launch areas A, B, and C. Direct access to the VAB from the control areas is via an enclosed bridge.

The LCC has four (4) elevators that can travel at 350 feet/minute. Provision is made for operation with and without attendant using local controls. Remote monitor/control is possible by use of the equipment in the CCC elevator panel.

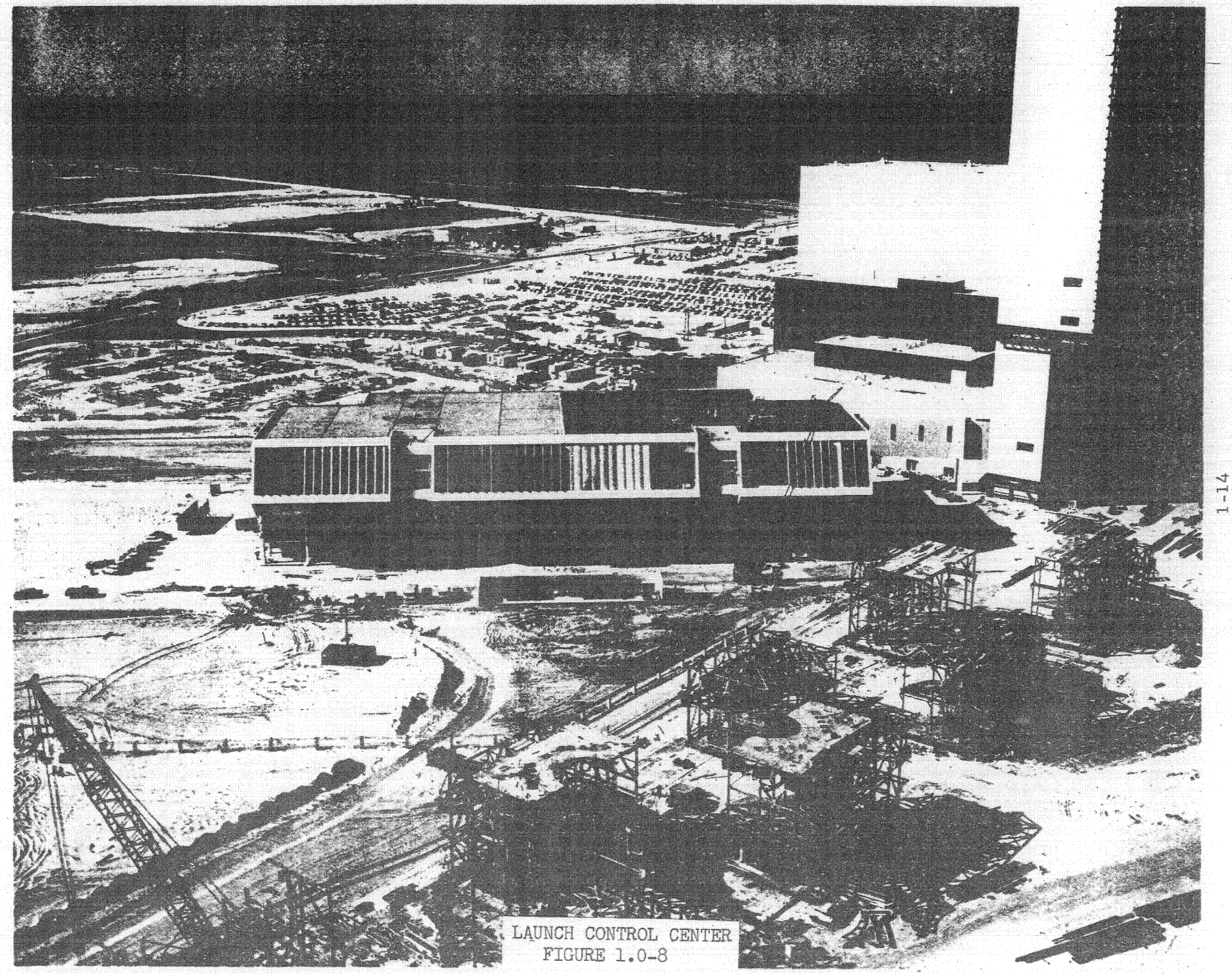

LAUNCH CONTROL CENTER
FIGURE 1.0-8

The electronic equipment areas of the second and third floor have raised false floors. These floors are raised approximately one foot and six inches to allow for inter-cabinet/console cabling and cables between cabinets and interface frames and distribution panels. This area is used as the supply or return air-conditioning plenum or for duct work. The floor is designed for a live load of 200 pounds per square foot.

Fluorescent fixtures in the suspended ceiling illuminate the equipment areas of the first, second and third floors of the LCC. Light intensity is 90-100 foot candles measured 30 inches above the floor. Selected fixtures throughout these areas are arranged for automatic transfer to the standby generator in the event of failure of the main power supply. As a supplement to this, emergency battery operated light units are strategically spotted throughout these equipment areas of the LCC. One passenger elevator is operable from the standby generator source in the event of failure of the main power supply. The power system is split into two distinct power systems. The power demands in this area are large and consist of two types of loads: industrial and instrumentation.

The industrial power system supplies electric power for lighting, general use receptacles, air-conditioning, elevators, pumps, compressors and the like. The instrumentation power system supplies power to the electronic equipment, computers, and related checkout equipment. This system supplies power as near free as possible from switching transients, large cycling loads, and intermittent motor starting loads.

This facility is air-conditioned to provide an environment of 76°FDB and 45%RH. This is accomplished by independent units and by air handling units which obtain chilled and hot water from the Utility Annex.

Communication and signal cable provisions have been incorporated into the design of this facility. Cable troughs extend from the LCC via the enclosed bridge to each ML location in the high bay. Cable troughs also extend to buried cableways that connect the LCC with the ML refurbishing areas and the Pad Terminal Connection Room (PTCR) at the Launch Pad. Antennas on the roof will provide an RF link to the launch pads and industrial area.

1.4 UTILITY ANNEX

1.4.1 Function. The Utility Annex has the primary function of providing support to the VAB and LCC. It will also provide support to other features of the VAB area.

1.4.2 Location. This facility is located in a separate structure on the west side of the VAB, adjacent to the low bay. See Figure 1.0-9.

1.4.3 Description. This building is approximately 103 feet wide and 253 feet long. A central refrigeration plant consisting of centrifugal units driven by four 2,700 horsepower synchronous motors provides 10,000 tons of air-conditioning with space for an additional 2,500 ton unit in the future. Four horizontal water tubes, forced circulation type hot water generators, provide 16,000 BTUs per generator per hour. There is space for a future unit. Two air compressors provide 750 cubic feet per minute at 250 pounds per square inch. (See Section 2.0.) Three diesel-driven pumps provide 4,000 gallons of water per minute for fire protection. (See paragraph 2.4). A 1,200 KW diesel-driven generator provides emergency power. (See paragraph 2.5.)

1.5 SEWAGE TREATMENT PLANTS

1.5.1 Functions. The plants treat VAB area and the launch area sewage.

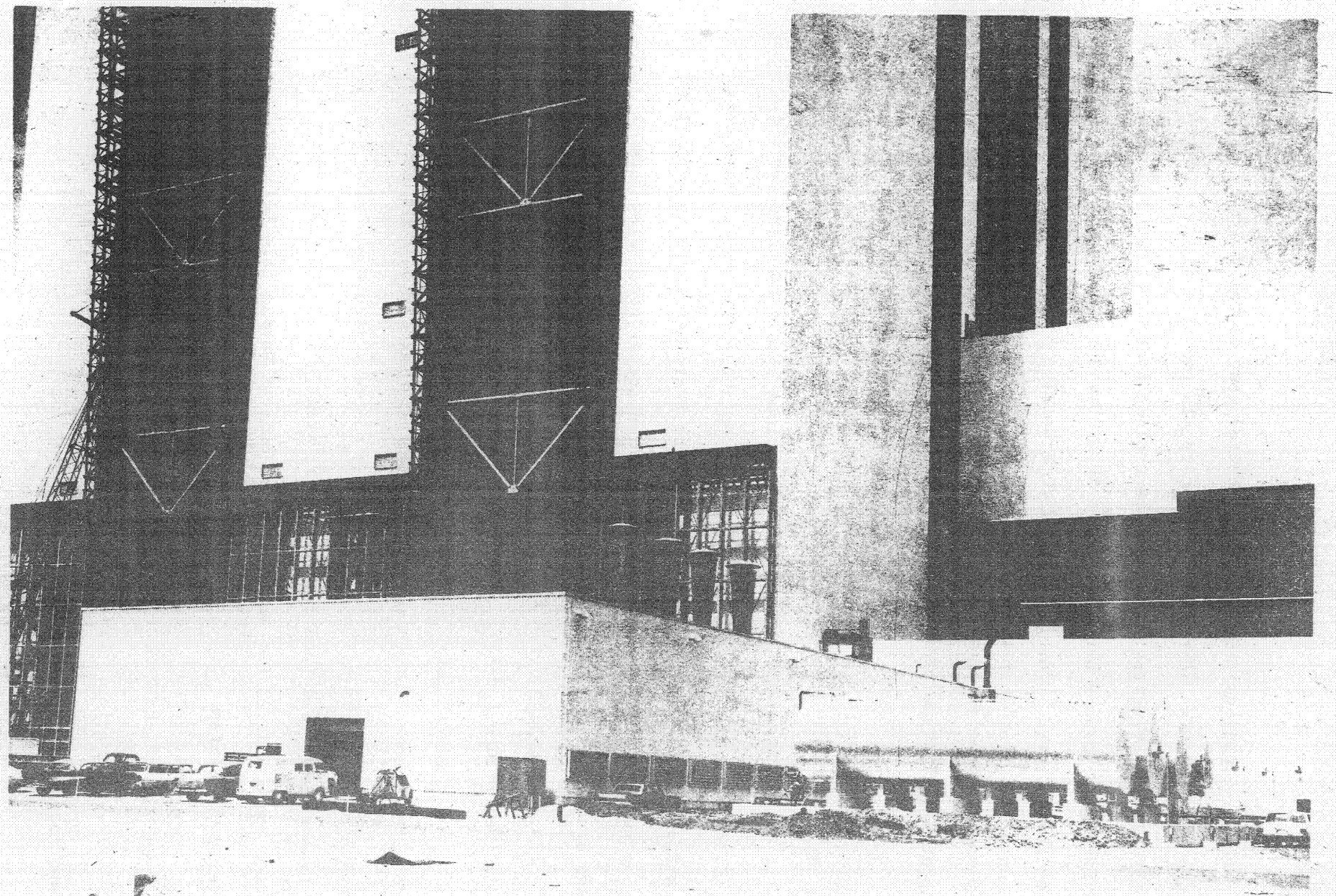

UTILITY ANNEX
FIGURE 1.0-9

1.5.2 Locations. One plant is located west of the VAB (See Figure 1.0-10) and the other is located west of the launch pad (See Figure 1.0-11).

1.5.3 Descriptions. The treatment plant located at the VAB area is designed for 1,200 persons with provisions to double the capacity. The plant located at the pad area is designed for 250 persons.

The VAB plant provides secondary treatment using an activated sludge wet burning process. The pad plant provides primary treatment with a sludge gas burner.

1.6 PAINT AND OIL STORAGE BUILDING

1.6.1 Function. This structure provides a safe location for the storage, dispensing, mixing, and processing of paints, oils, dopes, chemicals, bottled gases and similar flammable explosive or toxic materials in support of specific operational, maintenance, or similar industrial processing-type activities at Complex 39.

1.6.2 Location. The Paint and Oil Storage Building is located west of the VAB (See Figure 1.0-12).

1.6.3 Description. This building is a reinforced concrete frame structure with concrete block walls approximately 64 feet by 34 feet with a built-up gravel roof over rigid insulation on concrete slab roof. The structure is basically divided into two functional areas: (1) one story Paint and Oil Storage Room, and (2) two story Chemical Storage Room. This building is mechanically ventilated.

1.7 LAUNCH EQUIPMENT SHOP

1.7.1 Function. This shop provides technical support for the fabrication and repair of launch support equipment.

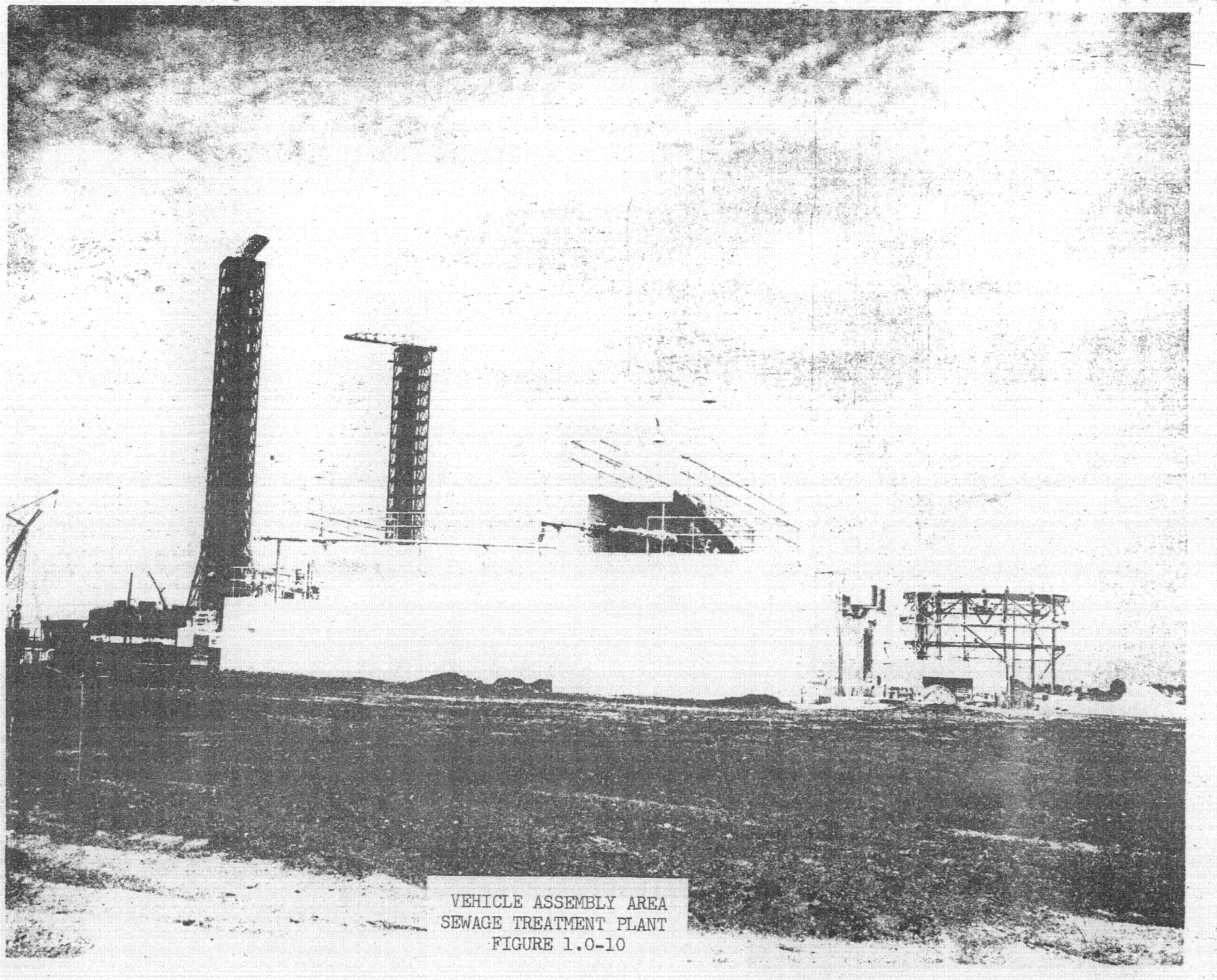

VEHICLE ASSEMBLY AREA
SEWAGE TREATMENT PLANT
FIGURE 1.0-10

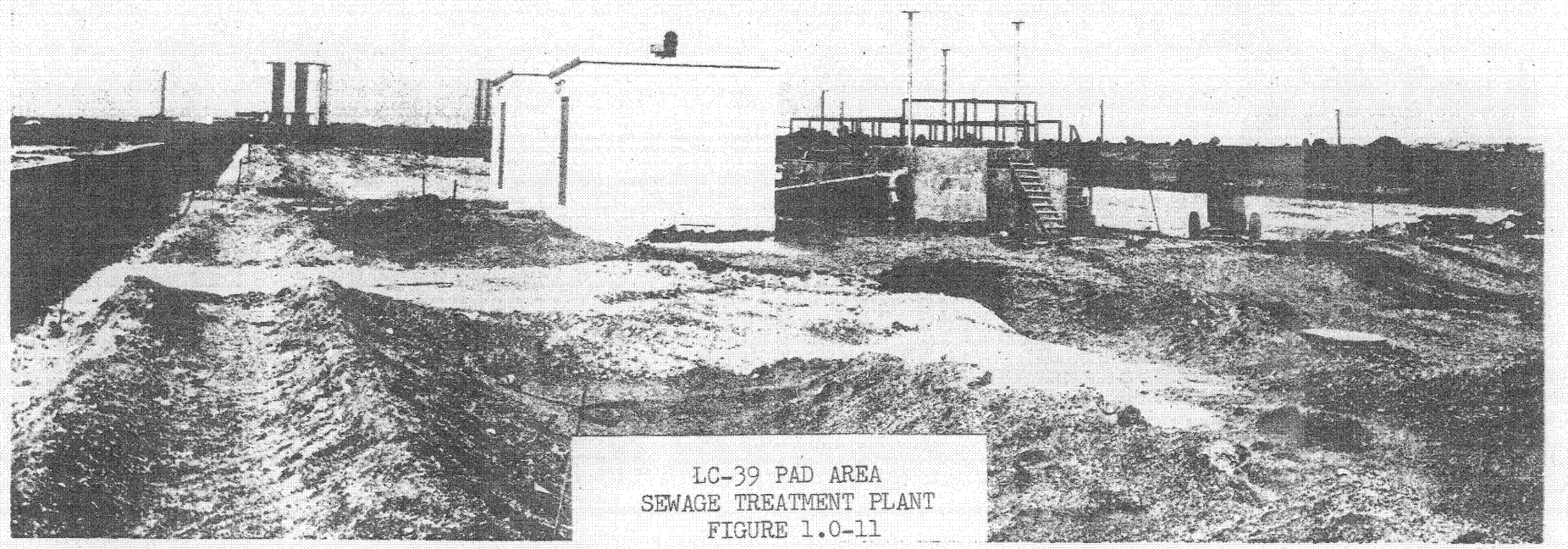

LC-39 PAD AREA
SEWAGE TREATMENT PLANT
FIGURE 1.0-11

PAINT & OIL STORAGE
BUILDING
FIGURE 1.0-12

1.7.2 Location. The shop is located at Launch Complex 39 south of Saturn Causeway. See Figure 1.0-13.

1.7.3 Description. The facility is housed in a building containing approximately 26,300 square feet. The shop has the capability for painting, machine shop work, sheet metal work, electronics, welding, woodworking and plastics fabrication, printed circuit fabrication, and pneumatic panels and hose fabrication.

1.8 ORDNANCE STORAGE AREA

1.8.1 Function. The Ordnance Storage Area will serve Complex 39 in the capacity of laboratory test area and storage area for ordnance items.

1.8.2 Location. This facility is located on the north side of the crawlerway and northeast of the VAB, approximately 2500 feet. This remote site was selected for maximum safety.

1.8.3 Description. The Ordnance Storage installation enclosed by perimeter fence is comprised of: three arch-type magazines (Figure 1.0-14), two storage buildings, one ready-storage building, an ordnance test building (See Figure 1.0-15), and a guard service building. These structures are constructed of reinforced concrete, concrete blocks, and over-burdened where required. This facility contains approximately 10,000 square feet of environmentally controlled space. It provides for storage and maintenance of retro-rockets, ullage rockets, explosive separation devices, escape rockets, and destruct packages. It also includes an area to test the electro-explosive devices that will initiate or detonate ordnance items. A service road from this facility connects to Saturn Causeway.

LAUNCH EQUIPMENT SHOP
FIGURE 1.0-13

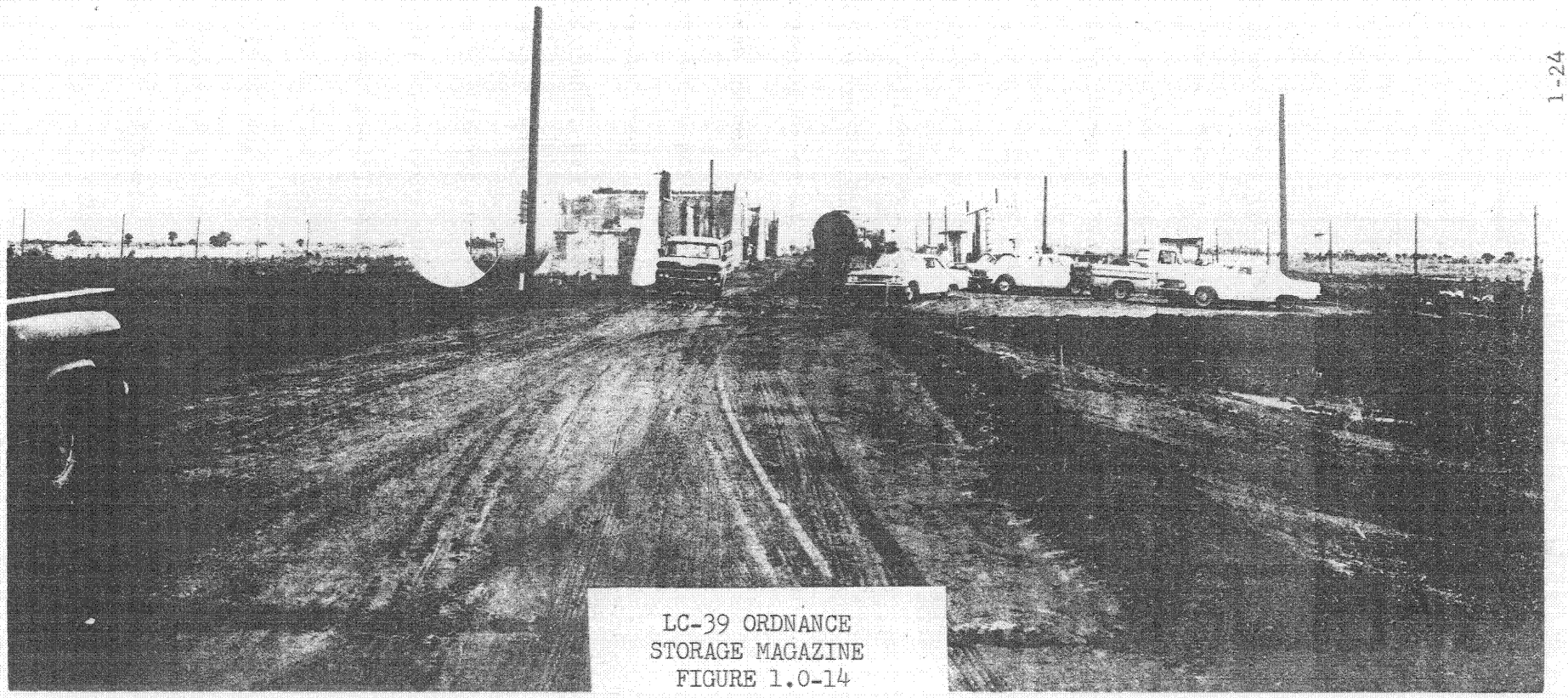

LC-39 ORDNANCE
STORAGE MAGAZINE
FIGURE 1.0-14

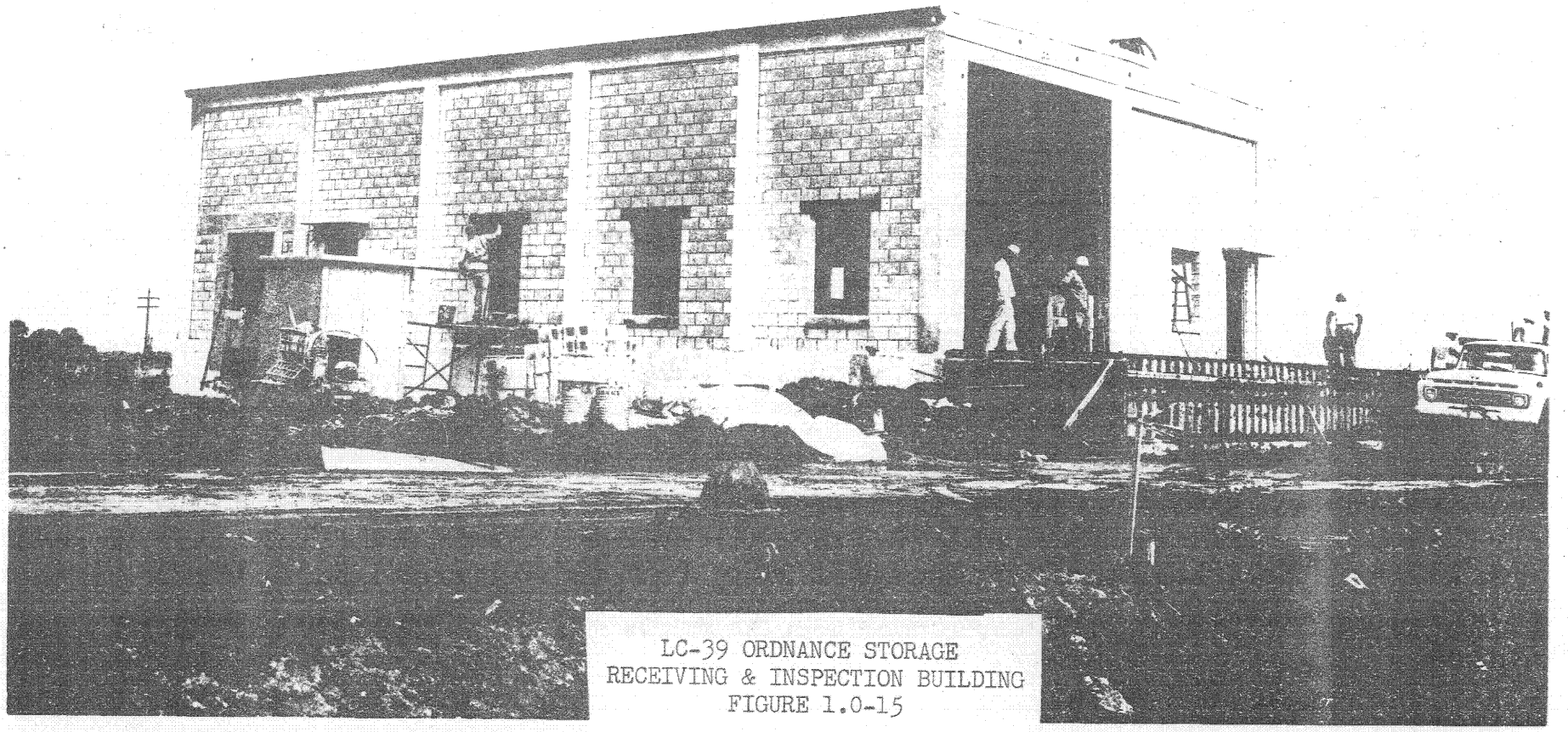

LC-39 ORDNANCE STORAGE
RECEIVING & INSPECTION BUILDING
FIGURE 1.0-15

1.9 MOBILE LAUNCHER (ML)

1.9.1 Function. The function of the Mobile Launcher is twofold: (1) the ML launch deck serves as a common base upon which the Umbilical Tower is permanently positioned and upon which the Saturn V launch vehicle and spacecraft are assembled, checked out, and launched, and (2) the ML base contains checkout and launch equipment used during VAB and pad operations.

1.9.2 Location. The ML is located in a high bay of the VAB during erection and assembly of the Saturn V space vehicle. With the fully assembled space vehicle on the launcher deck, the ML will be moved by the Crawler/Transporter via the crawlerway to the launch position on the pad. During post-launch periods, the ML will be returned to the ML Refurbish Area for inspection and repair prior to the erection of another vehicle. See Figure 1.0-16.

1.9.3 Description. The ML empty weight is approximately 10.5 million pounds. The base is 25 feet high, 160 feet long, and 135 feet wide. Three levels ("A", "B" and "O") - each provide approximately 12,000 square feet of floor space. The top level or "O" level of the launcher deck contains the four holddown arms and the tail service masts for servicing the S-IC stage. There is a 45-foot square opening through the ML base for rocket exhaust.

Access to the ML base interior is by personnel/equipment access doors opening into levels "A" and "B", and by sixteen equipment hatches located on level "O". The ML base has provisions on the bottom for interfacing with the crawler/transporter, the launcher to ground mount mechanisms, and the dynamic support mechanisms.

The umbilical tower, an open steel structure 280 feet high, provides support for the umbilical service arms, 18 work platforms, and distribution equipment

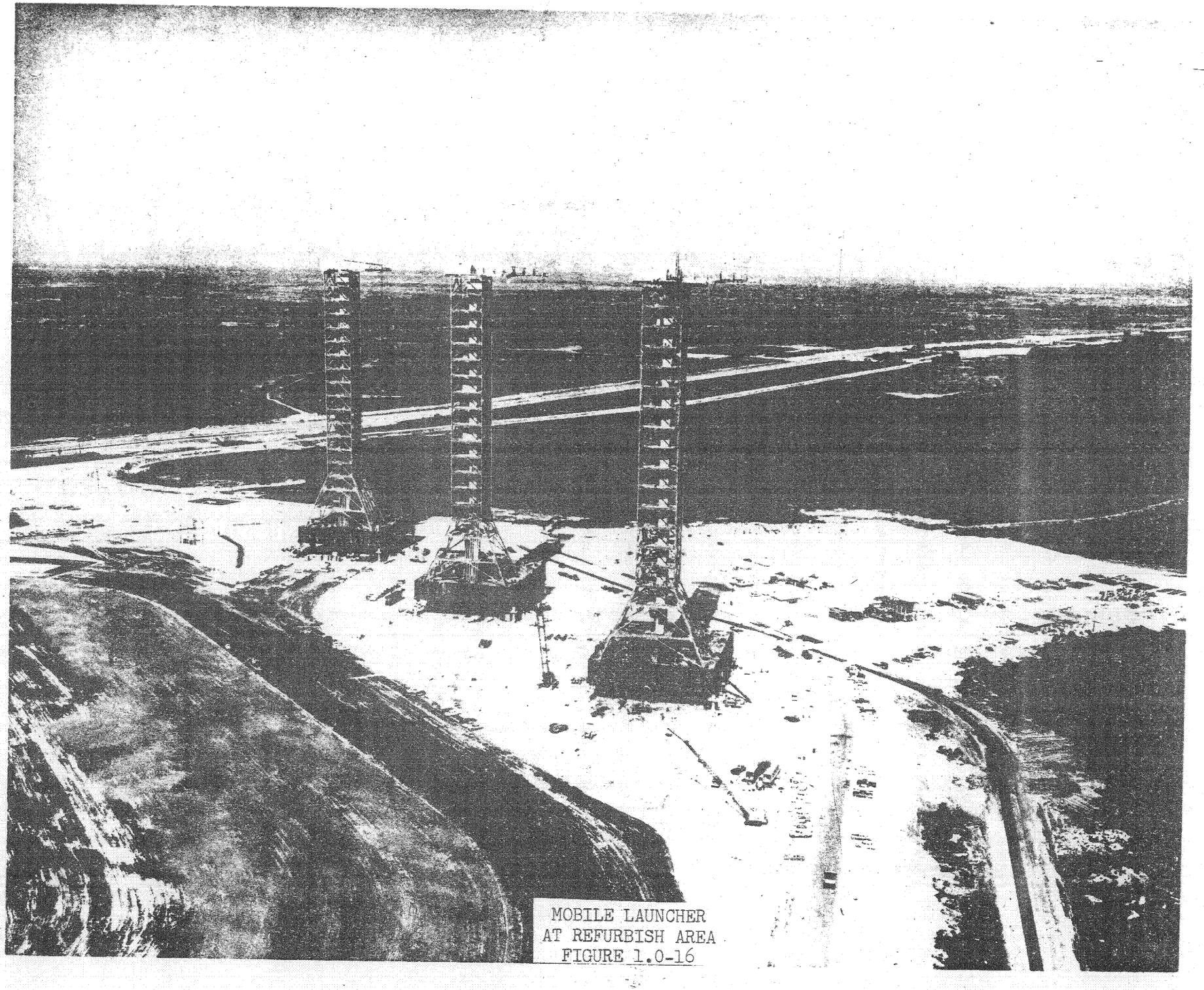

MOBILE LAUNCHER
AT REFURBISH AREA
FIGURE 1.0-16

for the propellant, pneumatic, electrical, and instrumentation systems. Two high speed elevators are centrally located within the umbilical tower. These elevators service 18 landings, from ML level "A" of the ML base to the 340 foot tower level. Each elevator car has a design load capacity of 2,500 pounds and is capable of traveling at 600 feet/minute. These elevators are provided with local controls which permit operation with or without an attendant. No remote controls are provided. A hammerhead crane is installed on the 380-foot level. (See Figure 1.0-17). Crane capacity is from 10 to 25 tons. The 25-ton capability extends out 50 feet from the tower center line and the 10-ton capability extends out 85 feet from the tower center line. The hook is capable of lowering to 468 feet below the top level (380 feet) of the umbilical tower. The crane is capable of 360 degrees of rotation in either direction at one RPM. Hoist speed is at 30 feet/minute with stepless control. Remote control of the crane from the ground and from levels "O" through 360' of the umbilical tower is provided by portable plug-in type control consoles.

Six launcher to ground mount mechanisms are provided for each ML location (pad, VAB, and ML refurbishment area). Four extensible columns are provided at the pad to absorb the dynamic loads generated by stage shutdown before lift-off.

At level "O", three tail service masts provide S-IC stage support for electrical cables, LOX drain and RP-1 fill and drain lines, hydraulic lines, and pneumatic lines.

Hydraulic and pneumatic systems operate the tail service masts. Each mast is hydraulically locked in an extended position until triggered for automatic retract. The triggering action is by mechanical mechanisms actuated by movement of the umbilical plate at stage breakway. The masts are capable of providing

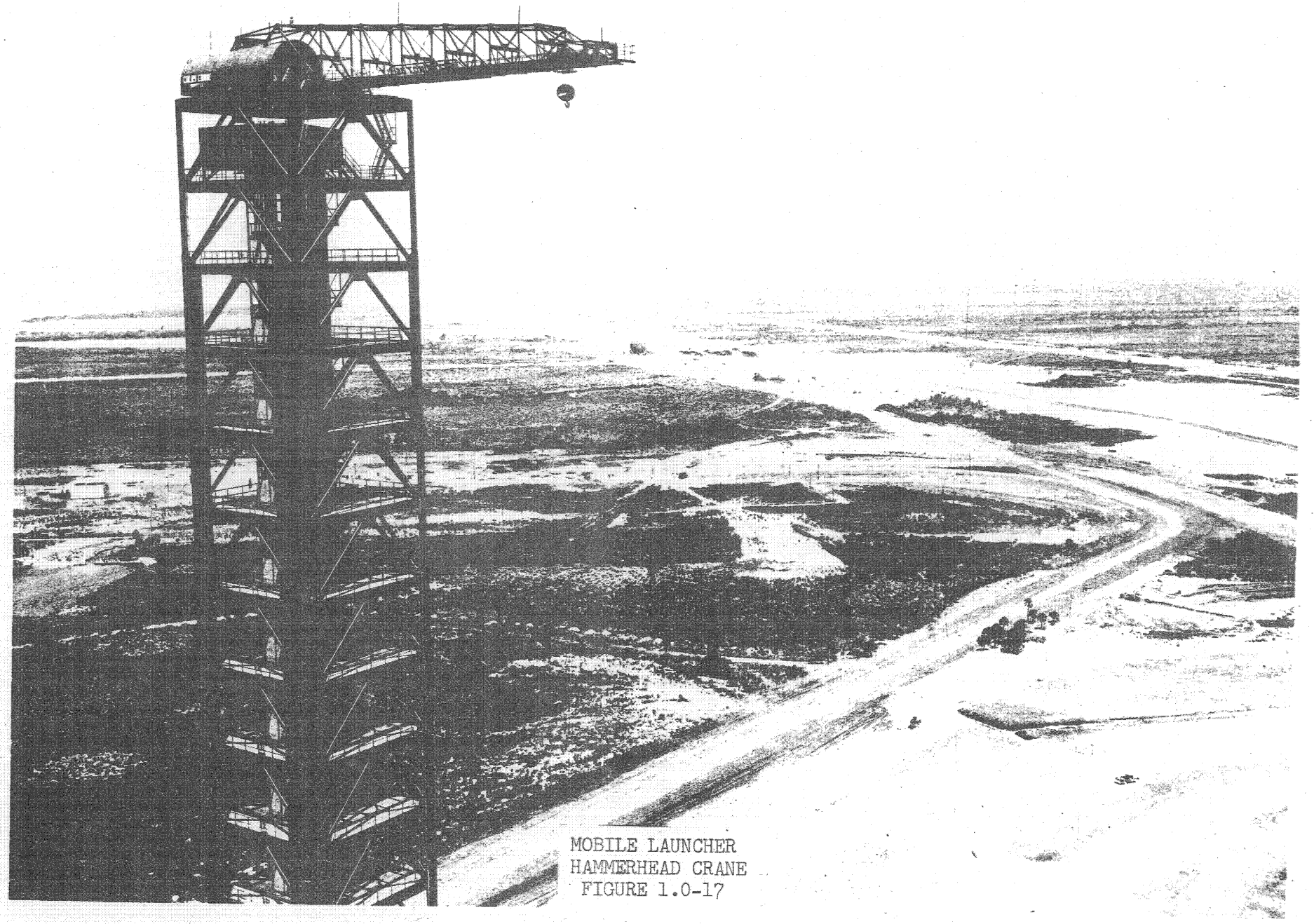

MOBILE LAUNCHER
HAMMERHEAD CRANE
FIGURE 1.0-17

a mechanical breakway from the S-IC stage in case of pneumatic or hydraulic failure by having the trigger mechanism disconnect the hydraulic system and by use of a counter-weight at the end of the arm.

Four dual-purpose support and holddown arms are located between the outboard engines. Holddown is accomplished by a preloaded toggle linkage that applies a pre-holddown force to the vehicle thrust structure. Each support and holddown arm contains a spherical compression block for load transmission. Level adjustment is accomplished by various shim thicknesses. The dimensions of each arm are approximately 6 feet by 12 feet at the base.

The ML base houses items such as the computer systems test sets, digital propellant loading equipment, hydraulic test sets, propellant and pneumatic lines, air-conditioning and ventilating systems, electrical power systems, and water systems. Shock-mounted floors and spring supports are provided so that critical equipment receives less than $\pm 1/2$ G mechanically induced vibrations. Electronic compartments within the ML base are provided with acoustical isolation to reduce the overall Saturn V rocket engine noise levels to 92 DB.

The air-conditioning and ventilating system for the ML base provides environmental protection for the equipment during operations, standby time, and in transit to and from the VAB to the launch pad. The system design is based on the following outside conditions: summer 95°FDB, 79°FWB; winter 35°F. Fueling operations at the launch area require that the compartments within the structure be pressurized to three inches of water and that the supply air originate from a remote area free of contamination. Chilled water is supplied to the ML at the VAB and the pad to provide cooling. There is one packaged air-conditioner,

which serves the areas requiring environmental control during transit. The computer room is maintained at 76°FDB$\pm$ 2°F, and 45% RH $\pm$ 5%. Instrumentation and pneumatic areas are maintained at 75°FDB $\pm$ 2°F, and 45% RG $\pm$ 5% at all times except during ML transit.

The primary electrical power supplied to the ML is divided into four separate services as follows: (1) instrumentation power, (2) industrial power, (3) in-transit power, and (4) emergency power.

Instrumentation and industrial power is supplied to the ML at 13.8 KV. These power systems are separate and distinct. Switching facilities, however, are provided within the ML to permit using either power source as backup for the other. Power is supplied from the crawler/transporter to a limited number of items during ML transit from the VAB to the pad. This power is used for the water glycol systems, computer air-conditioning, threshold lighting, and obstruction lights. The emergency power for the ML is from an engine generator located in the ground facilities. It is used for obstruction lights, emergency lighting, and for one tower elevator.

Water is supplied to the ML at the VAB and pad for fire, industrial and domestic purposes, and at the refurbish area for domestic purposes. See Section 2.2.

1.10 ML REFURBISH AREA

1.10.1 Function. This facility is used for post-flight refurbishment of the ML.

1.10.2 Location. The ML Refurbish Area is located immediately north of the VAB on Launcher Road. See Figure 1.0-16.

1.10.3 Description. The ML is returned to the ML Refurbish Area by the Crawler/Transporter after each space vehicle launch. The area includes:

a. Two elevators and stairs.

b. Power, water and communication interfaces.

c. Air Handling and Compressor Building

d. Support holddown structures.

A permanent open steelwork structure consisting of an elevator and stairway will be located on each side of the ML in the parked position. The elevator and stair of each of these structures will serve each level of the ML base. The walkways, which connect the fixed structure to the ML base levels, are retractable to permit the ML to move in and out of the park position. The elevator has a totally enclosed cab and is a passenger-freight type. The cab is 6' in width, 7' in depth, and 8' in heighth, 3000 pound capacity, with a maximum speed of 200 fpm. The cab is equipped with 6' wide and 8' high vertical sliding bi-parting type doors and selective, automatic pushbutton controls. The stairway is designed for a maximum live load of 200 pounds per square foot.

The Power Pedestal is an elevated platform to provide for the physical connection of ground based electrical power supply to the ML. A movable walkway, which is part of this structure, will be used to make connections to the ML. At the power pedestal, services include a 15KV oil switch and a 13.2 KV feeder to the ML interface. This structure is tied to the area lightning ground system through the use of air terminals.

The Communication Pedestal is an elevated platform to provide for the physical connection of communication cabling to the ML. A movable walkway is provided

to approach the ML for the actual connections. Communications terminals at this pedestal that interface with the ML include telephone and paging, and the operational intercom system.

An Air Handling and Compressor Building of permanent-type construction is provided to house equipment as follows:

a. Air compressor, electric driven - designed to deliver 400 SCFM at 125 psig. This equipment will provide air for ML for purging of electrical equipment and for general use.

b. Air Handling Unit - supplies conditioned air to the ML air interface. Chilled water to operate the AHU will be supplied by the mobile refrigeration unit "MRU" parked adjacent to the structure.

Other ML Refurbish Area support includes gaseous nitrogen and gaseous helium supply lines from the VAB High Pressure Gas Storage Battery. The supply line is capable of supplying approximately 2400 cfm of GN_2 at 6000 psig. The helium supply line is capable of supplying approximately 5000 cfm of helium at 6000 psig.

1.11 CRAWLER/TRANSPORTER

1.11.1 Function. The Crawler/Transporter is used to transport the Mobile Launcher (ML) and the Mobile Servicing Structure (MSS). The ML, including the space vehicle, is transported from the VAB to the launch pad. The MSS is transported from its parking area to and from the launch pad. After launch the ML is transported to the refurbish area and subsequently back to the VAB.

The crawler/transporter has the capability of lifting, transporting, and lowering the ML or the MSS as required, without the aid of any auxiliary

equipment. The Crawler/Transporter supplies limited electric power to the ML and the MSS during transit.

1.11.2 Description.

1.11.2.1 The Crawler/Transporter consists of a rectangular chassis which is supported through a suspension system by four dual-tread crawler trucks. The overall length is 131 feet and the overall width is 114 feet. The unit weighs approximately 5.5 million pounds. See Figure 1.0-18.

The Crawler/Transporter is powered by self-contained diesel electric generation units. Electric motors in the crawler trucks propel the vehicle. Electric motor-driven pumps provide hydraulic power for steering and suspension control. Air-conditioning and ventilation is provided where required.

The Crawler/Transporter can be operated with equal facility in either direction. Control cabs are located at each end and their control function depends on the direction of travel. The leading cab in the direction of travel will have complete control of the vehicle. The rear cab will, however, have override controls for the rear trucks only.

The maximum speed of the Crawler/Transporter is 2 m.p.h. when unloaded, 1 m.p.h. when fully loaded on a level grade, and 0.5 m.p.h. when fully loaded and on a 5% grade. (It is capable of accelerating a maximum of 2.58 feet/second/second.) It has a 500 foot minimum turning radius and is capable of positioning the ML or the MSS on the facility support pedestals within ± 2 inches.

1.11.2.2 Chassis. The chassis of the Crawler/Transporter is a rigid steel framework approximately 130 feet by 90 feet. It rests on four crawler-trucks and supports the ML or the MSS as well as housing the engines, generators, and all other auxiliary equipment.

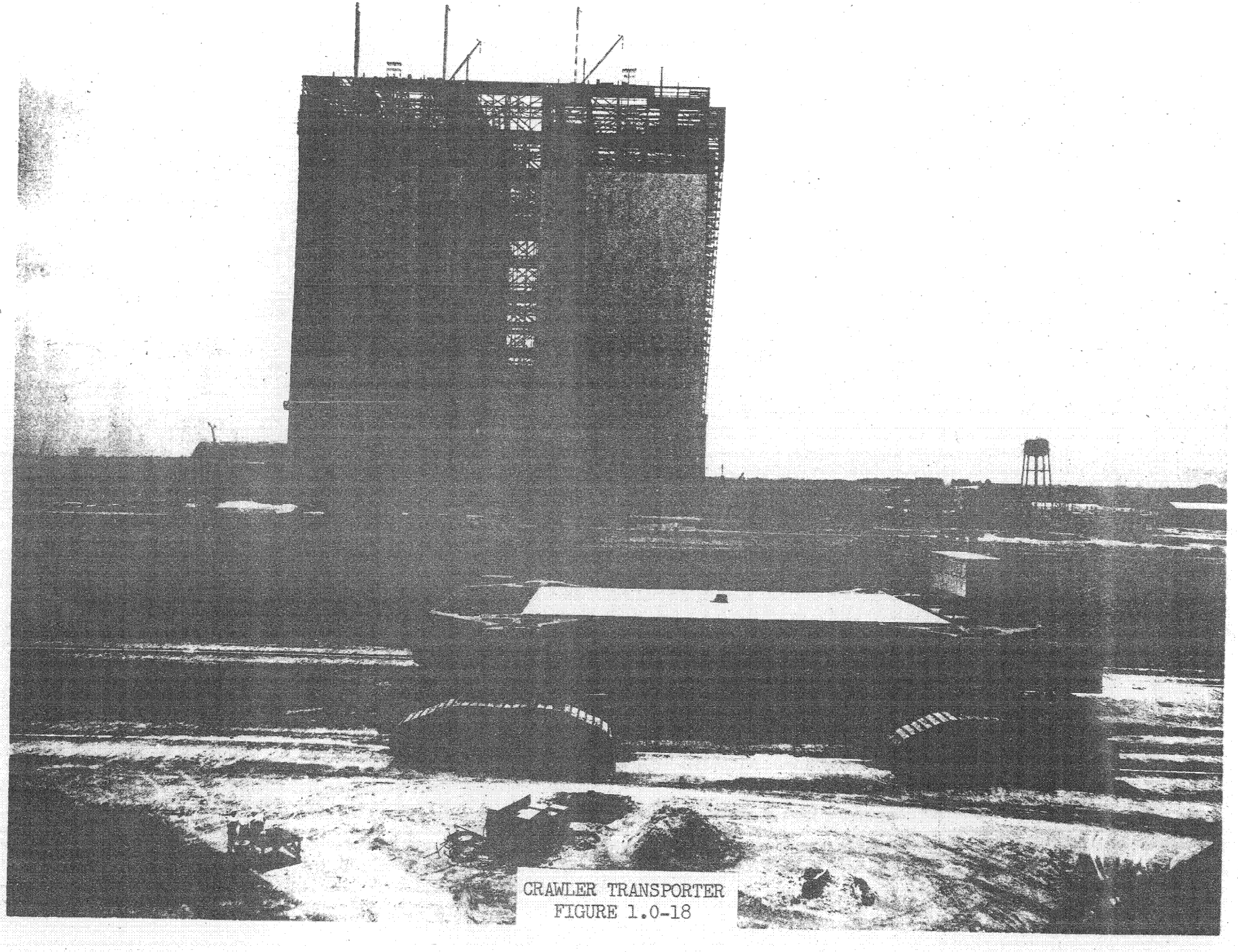

CRAWLER TRANSPORTER
FIGURE 1.0-18

The chassis provides the strength to contain all stresses generated by propulsion and steering operations. The ML and MSS rest on the chassis of four points which are located over the crawler-trucks. The only positive restraint between the Crawler/Transporter and the ML or MSS is a group of devices that allow horizontal shear loads to be transmitted. This is accomplished by restraining horizontal shear forces in both directions at the first support point, one direction at the second support point, the other direction at the third support point, and unrestrained at the fourth support point. This arrangement isolates the ML and MSS from the stresses internal to the CT chassis.

The chassis is supported by the crawler-trucks, through a suspension system at each of the four corners. A cluster of four hydraulic cylinders at each corner transmits the vertical load to the trucks. A guide tube is centered between these cylinders to transmit the horizontal forces and still provide freedom of movement in the vertical direction.

1.11.2.3 Crawler-Trucks. The four crawler-trucks provide support to the chassis through the suspension system and contain the drive motors for vehicle propulsion. Each unit is 24 feet wide and 41 feet long and has two independently driven tracks which are approximately 7.6 feet wide. The track utilizes a steel link crawler belt and provides a uniform bearing surface of 500 square feet at one inch depression of the resilient roadbed. The track assembly is automatically lubricated. See Figure 1.0-19.

Each track is driven by two DC mill motors which are coupled to the drive sprockets by gear trains. There are sixteen drive motors in all, four in each crawler-truck assembly. These motors have ample protection and cooling

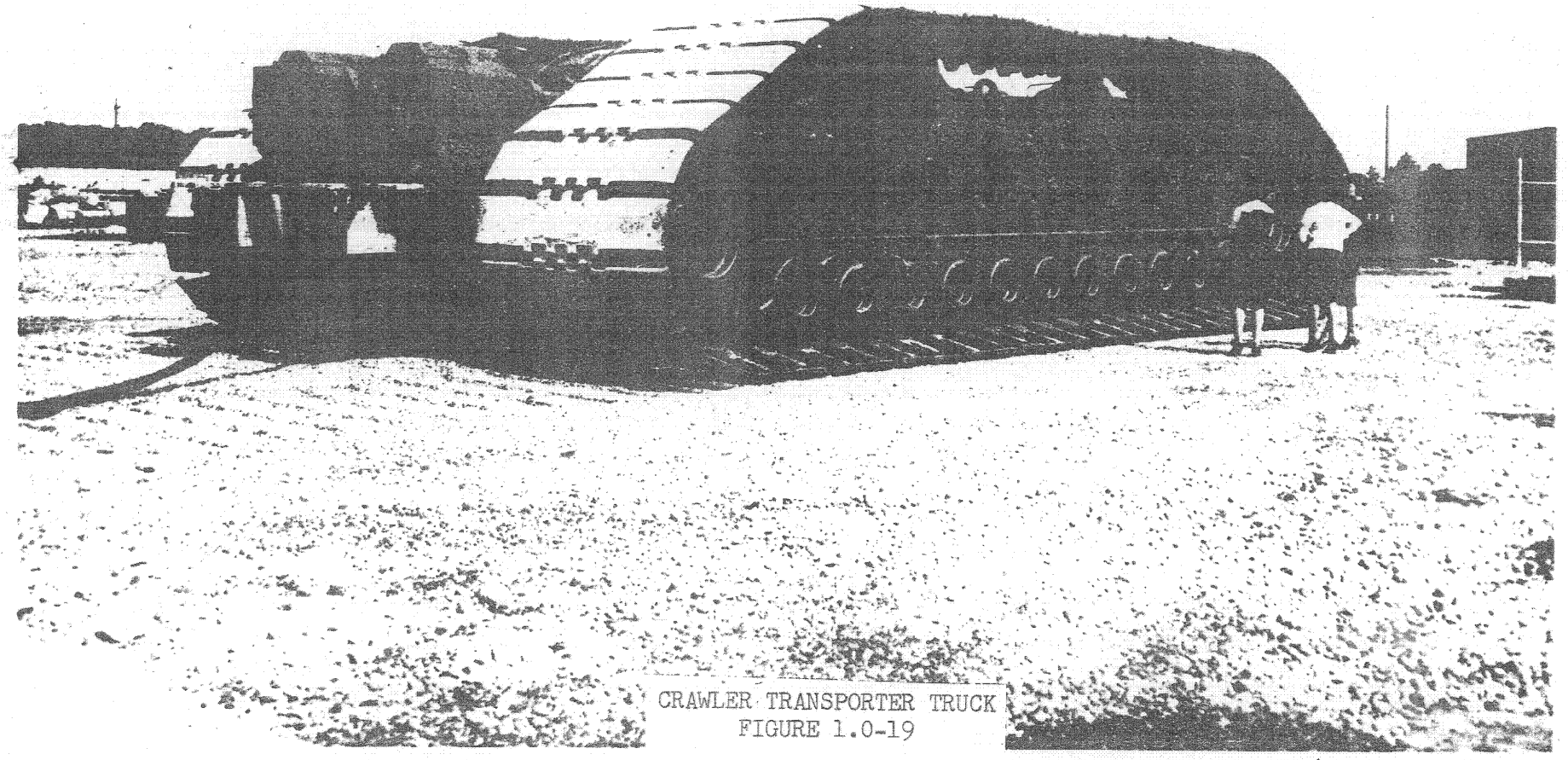

CRAWLER TRANSPORTER TRUCK
FIGURE 1.0-19

provisions. Braking is accomplished by spring loaded, air release, brake shoes on each motor.

1.11.2.4 Power System. Electric power for the operation of all Crawler/Transporter functions is obtained from self-contained power units. All major load requirements are supplied by means of electric motors. See Figure 1.0-20.

Two water-cooled, locomotive type diesel engines (2750 HP each), each coupled to two inline DC generators power the sixteen traction drive motors. The loss of one generator will remove power from four motors, but because one of the motors will be on each corner, a balance in the tractive effort will be maintained. The motors are connected so that, of the motors not powered, two will be on the trailing ends and two will be on the leading ends of the crawler unit. See Figure 1.0-21.

There are two 750KW, 480V, 3 phase, 60 cycle generators, each driven by a 1050 HP water-cooled diesel engine. Each generating unit provides one-half of the hydraulic system power requirements, and one-half the remaining miscellaneous on-board power requirements. One unit can be transferred to the other to preserve continuity of operation, particularly to the hydraulic leveling function.

Two 150 KW, 480 V, 3 phase, 60 cycle diesel generators are provided to supply power to the ML and MSS during transit. An interface connection is provided for these functions.

1.11.2.5 Hydraulic Control Systems.

1.11.2.5.1 General. The hydraulic systems are powered by electrically-driven pumps. Various control systems enable the

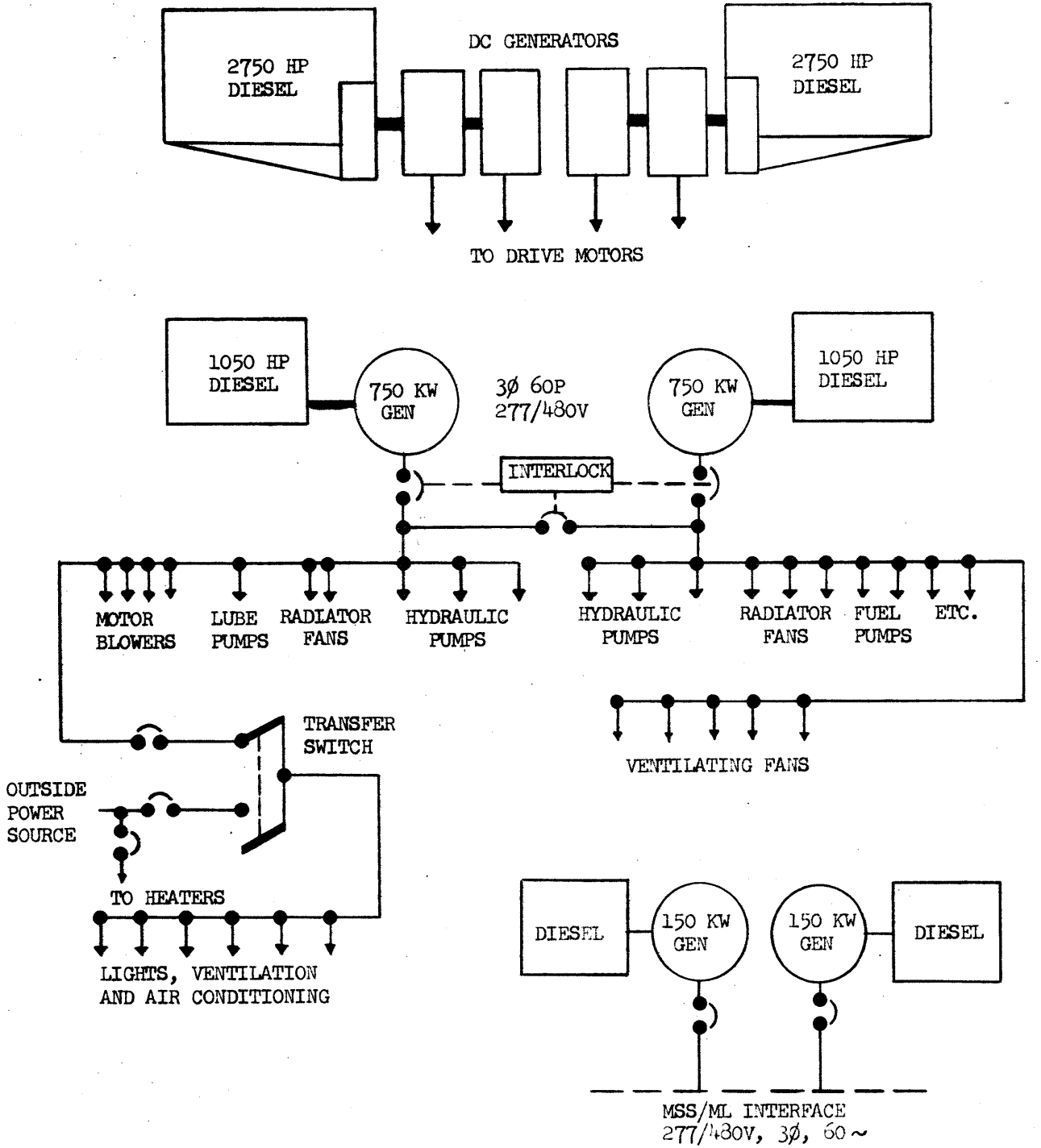

C/T ELECTRIC POWER SYSTEMS

FIGURE 1.0-20

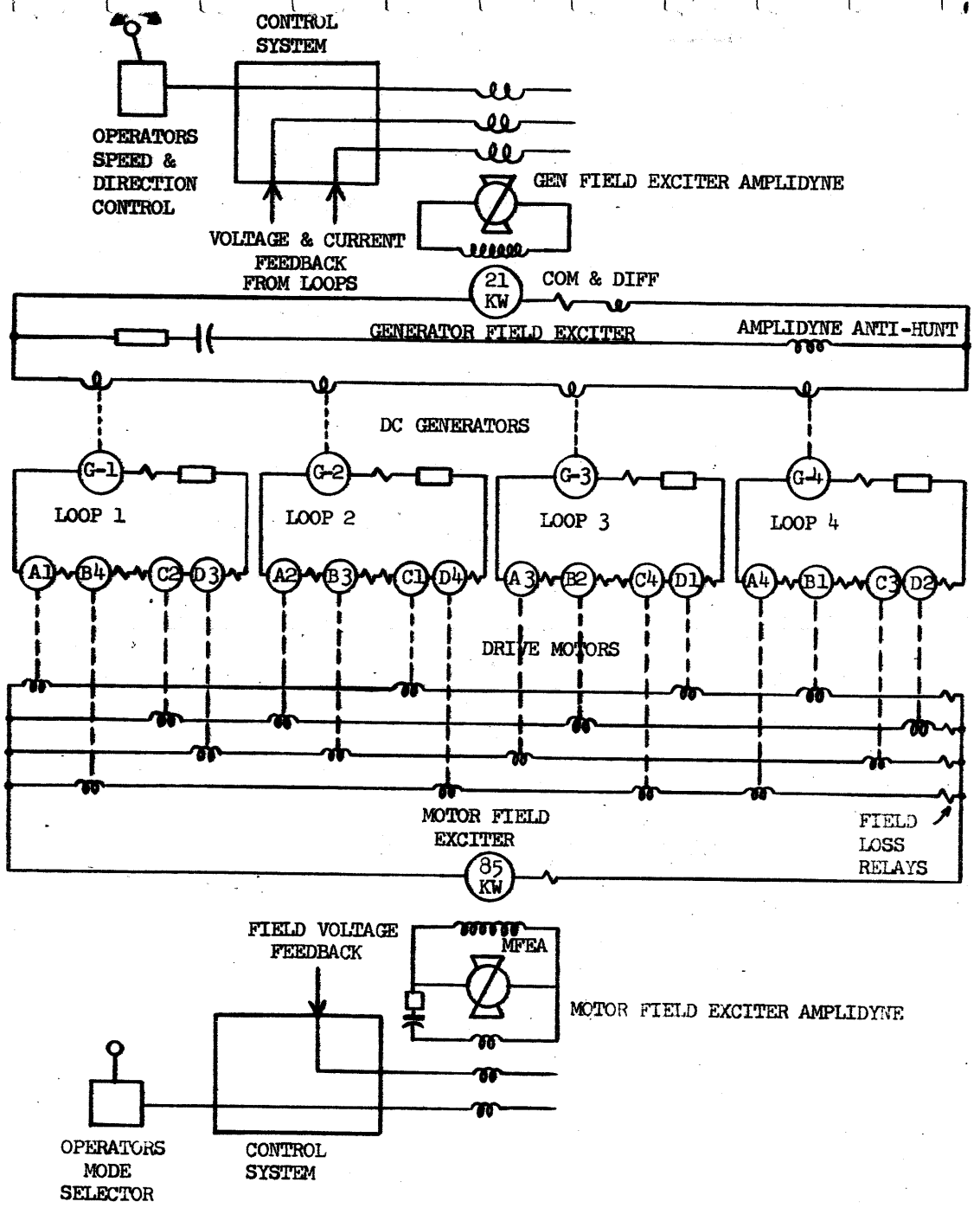

C/T SINGLE-LINE PROPULSION SYSTEM SCHEMATIC

FIGURE 1.0-21

hydraulic system to perform the functions of steering, leveling, jacking, and load equalization. See Figure 1.0-22.

1.11.2.5.2 Steering System. Steering is accomplished by operating the front crawler-trucks as a unit, and the rear crawler-trucks as a unit. Steering is provided by a servo-controlled hydraulic system which actuates hydraulic steering cylinders. Two of these cylinders are used on each truck and operate in a push-pull manner. One end of each cylinder is connected to the chassis, the other to the crawler-truck.

1.11.2.5.3 Suspension System. The suspension system provides for jacking, leveling, and load equalization. There are four hydraulic cylinders on each crawler-truck which surround the guide tube and support the chassis vertical loads. These cylinders and their associated hydraulic control units comprise the suspension system. These cylinders can be extended six feet from their retracted position. Limit switches prevent bottoming or excessive extension. Duplicate pumps insure continuity of operation.

Jacking operations require extension or retraction of all suspension system cylinders. This function will normally be carried out only when steering is not required, due to the demands placed on the hydraulic system. Controls for jacking and lowering are located in each cab. The jacking input is supplied to each leveling axis and the vehicle level will be maintained by the leveling system. The jacking capability allows the ML or the MSS to be raised from and lowered to the supporting pedestals on location.

The leveling control is automatic and maintains the level of the chassis within the limits of plus or minus five minutes of an arc at all times, with

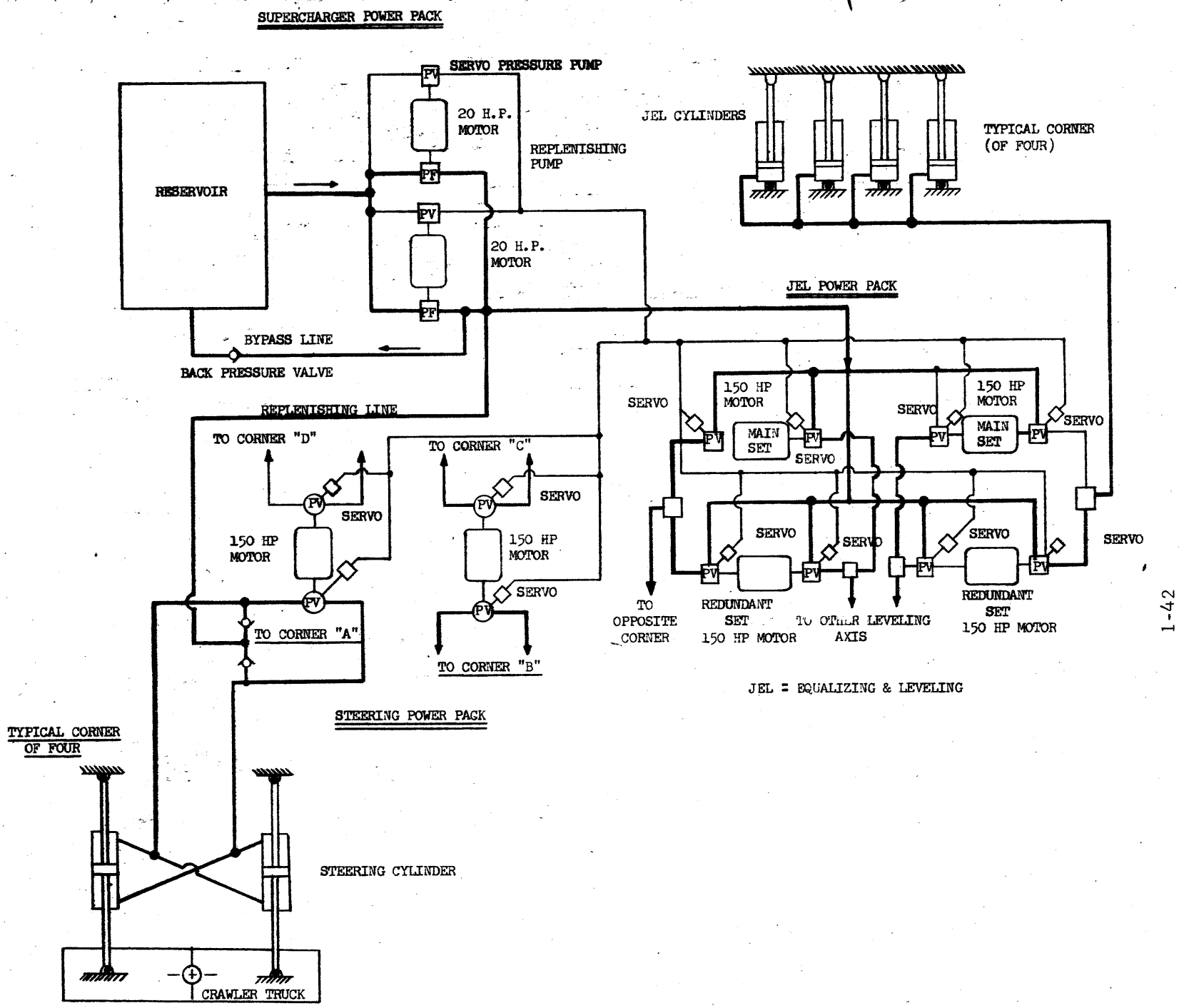

C/T HYDRAULIC SYSTEM

FIGURE 1.0-22

the further requirement that no point in the support plane will be more than two inches out of plane at any time.

A servo system senses errors in level by means of pressure manometer and provides an error signal which controls the hydraulic suspension cylinders. Leveling is accomplished by transfer of hydraulic fluid to and from cylinders on opposite sides of the two diagonal leveling axis.

Load equalization provides a method of controlling the load distribution on each of the four chassis support points. The equalization system causes the sum of the loads on one diagonal axis to equal the sum of the loads on the other diagonal axis. Pressure is sensed in the suspension cylinders and when a minimum differential is reached, a servo control system actuates hydraulic pumps to provide the necessary equalization. In the event differential pressure exceeds 250 psi, the system shuts down and will be in a no-go condition.

1.11.2.6 Air- Conditioning and Ventilation. Window units provide conditioned air to the cabs and the equipment monitoring room. Outside filtered air is provided during Crawler/Transporter operation to the engine, generator, and hydraulic rooms.

1.11.2.7 Communications. A sound power telephone communication system is provided between all manned work stations on the Crawler/Transporter. This system may also be connected to the ML and the MSS through the appropriate interface.

1.11.2.8 Operators Station. There are two identical control cabs, one at each end of the Crawler/Transporter. Control functions are provided in each cab. These include control of propelling motors and brakes, steering, and jacking. Each cab is capable of accommodating three men during instruction periods.

1.11.2.9 Lightning Protection. Lightning protection for the Crawler/Transporter will be provided both when in transit and at its parking position.

Ground rods driven along the center of the crawlerway median strip are connected to form a counterpoise. Contact with the crawler is made by means of a drag chain. When in the parked position, it will be connected to ground rods by means of a grounding cable. The ML and the MSS, when on the crawler, will be grounded to the crawler grounding system.

1.12 CRAWLERWAY

1.12.1 Function. The crawlerway serves as the roadway for movement of the Crawler/Transporter between the VAB, launch pad, MSS Park Area and ML Refurbish area.

1.12.2 Locations. The Crawlerway extends from the east and west high bay doors of the VAB to the launch support structure at the pad with branches serving the MSS Park Area and the ML Refurbish Area. See Figure 1.0-23.

1.12.3 Description. The Crawlerway is approximately three miles in length between the VAB and Pad "A". It consists of two surfaces separated by a 50-foot wide median. Each surface consists of crushed limestone and is 40 feet wide and 6½ feet thick. One side and parallel to the crawlerway is a 24-foot wide access road; on the other side are located supports for high pressure gas lines from the CCF to the VAB and pad, underground power ductway, communication and instrumentation ductway, and an 18-inch water main. Other structures located along the crawlerway are the Data Link Transmission Repeater Buildings, High Pressure Gas Converter/Compressor Facility (CCF), and Arming Tower park position which contains foundation, supporting arms, and utilities.

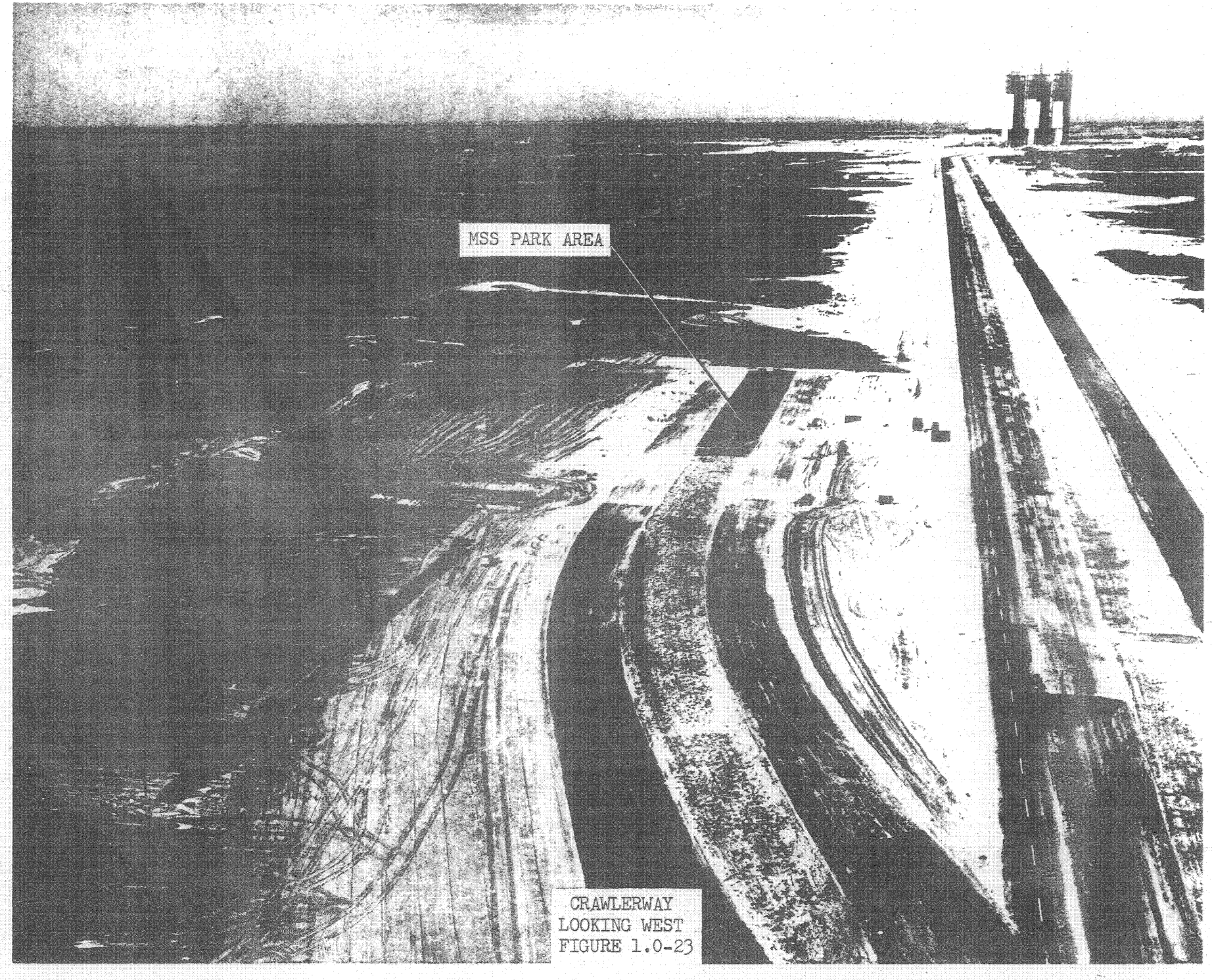

CRAWLERWAY
LOOKING WEST
FIGURE 1.0-23

The Crawler/Transporter uses the crawlerway to transport an unfueled Saturn V/ Apollo vehicle mounted on the ML to the pad. After launch, the ML is returned to the refurbishment area at the VAB via the crawlerway. The MSS is transported between the pad and its parking location via the crawlerway.

1.13 MOBILE SERVICING STRUCTURE

1.13.1 Function. The Mobile Servicing Structure (MSS) provides access to the space vehicle which cannot be serviced from the ML while at the launch pad. See Figure 1.0-24.

1.13.2 Location. During non-launch periods, the MSS is located in a parked position along side of the crawlerway 7,000 feet from the nearest launch pad. The MSS is located at the launch pad at specified times during Launch Pad Operations. See Figure 1.0-23.

1.13.3 Description. The MSS is approximately 402 feet high, measured from ground level. The tower structure rests on a base which is 135 feet. The top of the MSS base is 47 feet above grade. At the top the tower is 87 feet by 113 feet.

a. Work Platforms. The structure contains five work platforms which provide access to the space vehicle. The outboard sections of the platforms open to accept the vehicle and close around it to provide access to the launch vehicle and spacecraft via these platforms. The moveable sections of the platforms are actuated by hydraulic cylinders.

The lower two platforms are vertically adjustable to serve different parts of the launch vehicle. The upper three platforms are fixed but can be disconnected from the tower and relocated as a unit to serve different vehicle configurations.

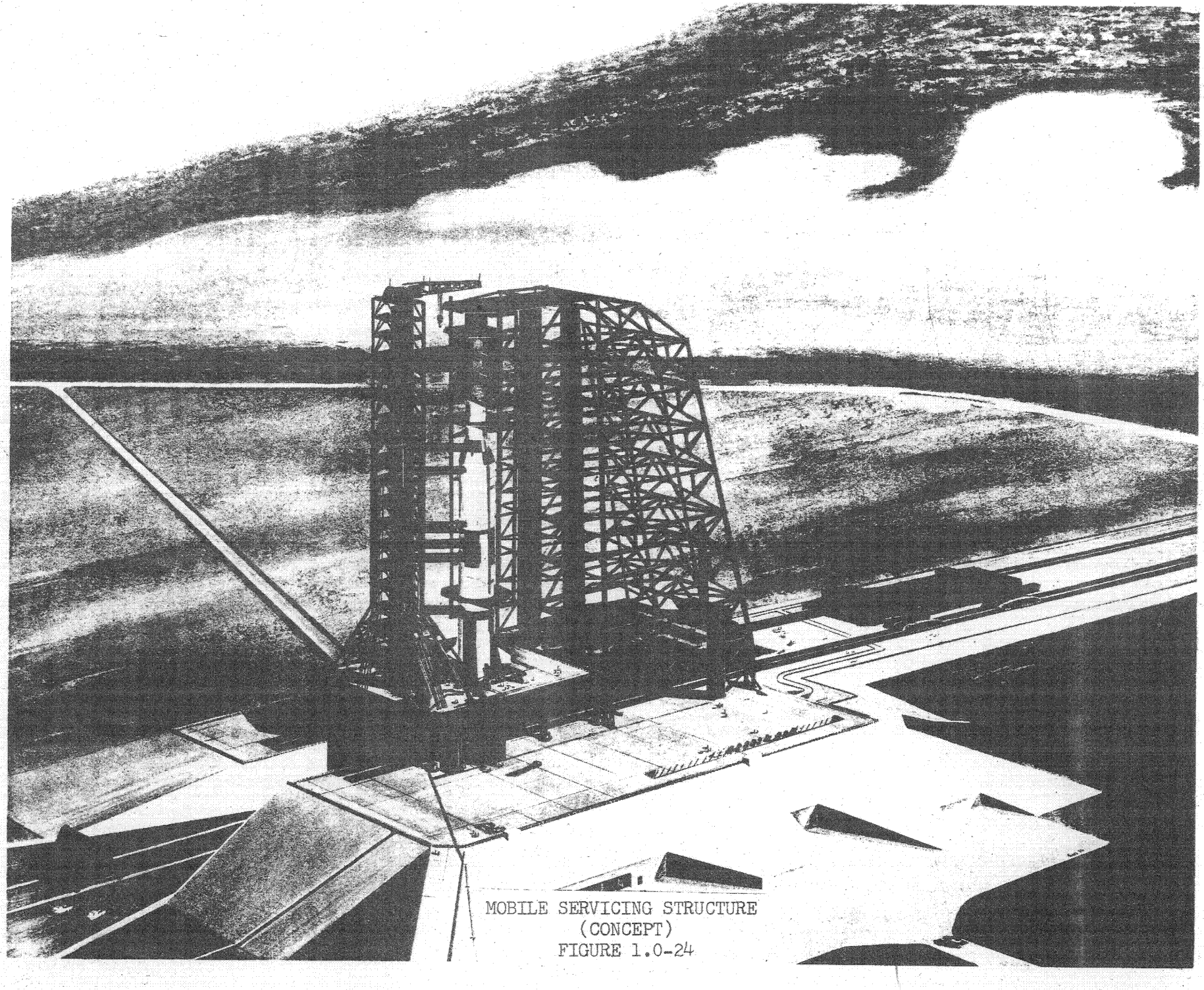

MOBILE SERVICING STRUCTURE
(CONCEPT)
FIGURE 1.0-24

The two lower platforms and the uppermost platform are open and bordered by a chain-link fence. The remaining two platforms are enclosed and will provide environmental control for the spacecraft.

b. Access. Access to various parts of the tower is provided by three (3) elevators and one (1) manlift. One elevator and the manlift provide access from ground level to the base work areas. Two elevators are high-rise combination passenger/freight types and serve the vehicle access platforms from the tower base. The elevators have local control for operation with or without attendant.

c. Base Buildings. The MSS contains the following buildings located at base level:

(1) Mechanical Equipment Room.

(2) Operations Support Room.

(3) Sanitary Facility.

(4) Elevator Equipment Room.

(5) Communications and TV Equipment Room.

(6) Electrical Equipment Room.

(7) ACE Room at the 25 foot level (bottom of base truss).

d. Facility Systems. The MSS will contain air-conditioning, electrical power system, various communication networks, fire protection system, compressed air system, nitrogen pressurization system, hydraulic pressure system and a potable water system.

(1) Air Conditioning (A/C). The conditioned air for various parts of the MSS is provided by individual units. On the base platform, the communications building and the operations support building each have A/C units. The remaining buildings have only ventilating units.

(2) Electrical Power System. The power for the MSS is obtained from a 13.8 KV interconnect power pedestal located at the launch pad and park areas. During transit the power required for elevators, hydraulic pumps, obstruction perimeter and stairway lighting, is supplied from the crawler/transporter. Two diesel-driven generators, 150 KW each, supply power in event of power failure from the CT or interface at the launch pad or park area.

(3) Communications Networks. The MSS contains the following communications facilities:

(a) Sound Power Telephone System. This system provides communication between the Crawler Cab, base platform buildings, and nine tower levels.

(b) Telephone System. There is a regular telephone system serving the base platform rooms and nine tower levels.

(c) Base Paging System. The tower will be connected to the base paging system. Loudspeakers are provided in the base platform rooms, ten tower levels and on work platforms #1, #2, #3 and #4.

(d) Fire Alarm System. The base platform buildings have heat activated sensors connected to the alarm system. Fire alarm bells and manual fire alarm stations are located on the base platform and nine tower levels.

(e) Operational Intercom System (OIS). OIS facilities are provided on the tower base and on nine tower levels.

1.14 HIGH PRESSURE GAS FACILITY

The high-pressure gas facility consists of a central converter/compressor facility, high-pressure gas storage battery at the pad, the VAB high-pressure

storage battery, low and high-pressure cross-country supply lines, and pad distribution piping.

1.14.1 Converter/Compressor Facility.

1.14.1.1 Function. The Converter/Compressor Facility (CCF) converts liquid nitrogen to low pressure and high pressure gaseous nitrogen compresses gaseous helium to 6,000 psig. The gaseous nitrogen and helium are then supplied to the storage facilities at the launch pad and at the VAB.

1.14.1.2 Location. The CCF is located on the north side of the crawlerway, approximately at the mid-point between the VAB and the main crawlerway junction to launch pads A and B, C (future). See Figures 1.0-25, 1.0-26 and 1.0-27.

1.14.1.3 Description. Facility and equipment of the CCF are:

a. One-story permanent-type structure, approximately 2,200 square feet (Maintenance - 2045, Office - 144).

b. Liquid nitrogen dewar tank (500,000 gallon capacity).

c. Tank vaporizers.

d. Six 1,100 scfm - 6,000 psig high-pressure liquid nitrogen pump and vaporizer units.

e. Five 150 scfm - 6,000 psig high-pressure helium compressor units.

f. Two 230 gpm liquid nitrogen pumps.

g. One 230 gpm low pressure liquid nitrogen vaporizer.

HIGH PRESSURE GAS FACILITY
CENTRAL CONVERTER

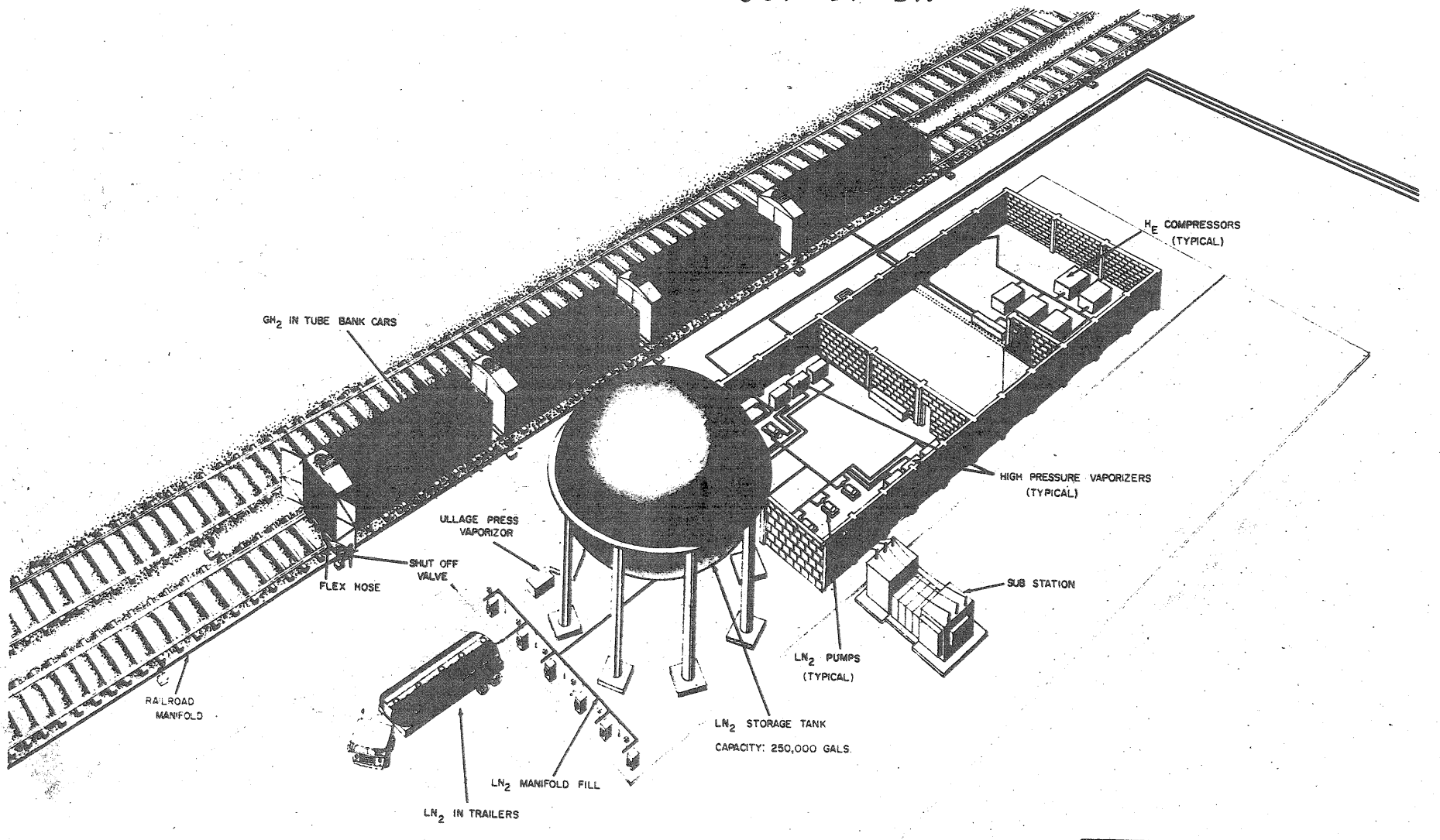

LEGEND
N_2
H_e
LC 39 MAY 15, 1963

HIGH PRESSURE GAS FACILITY
CONVERTER COMPRESSOR
(CONCEPT)
FIGURE 1.0-25

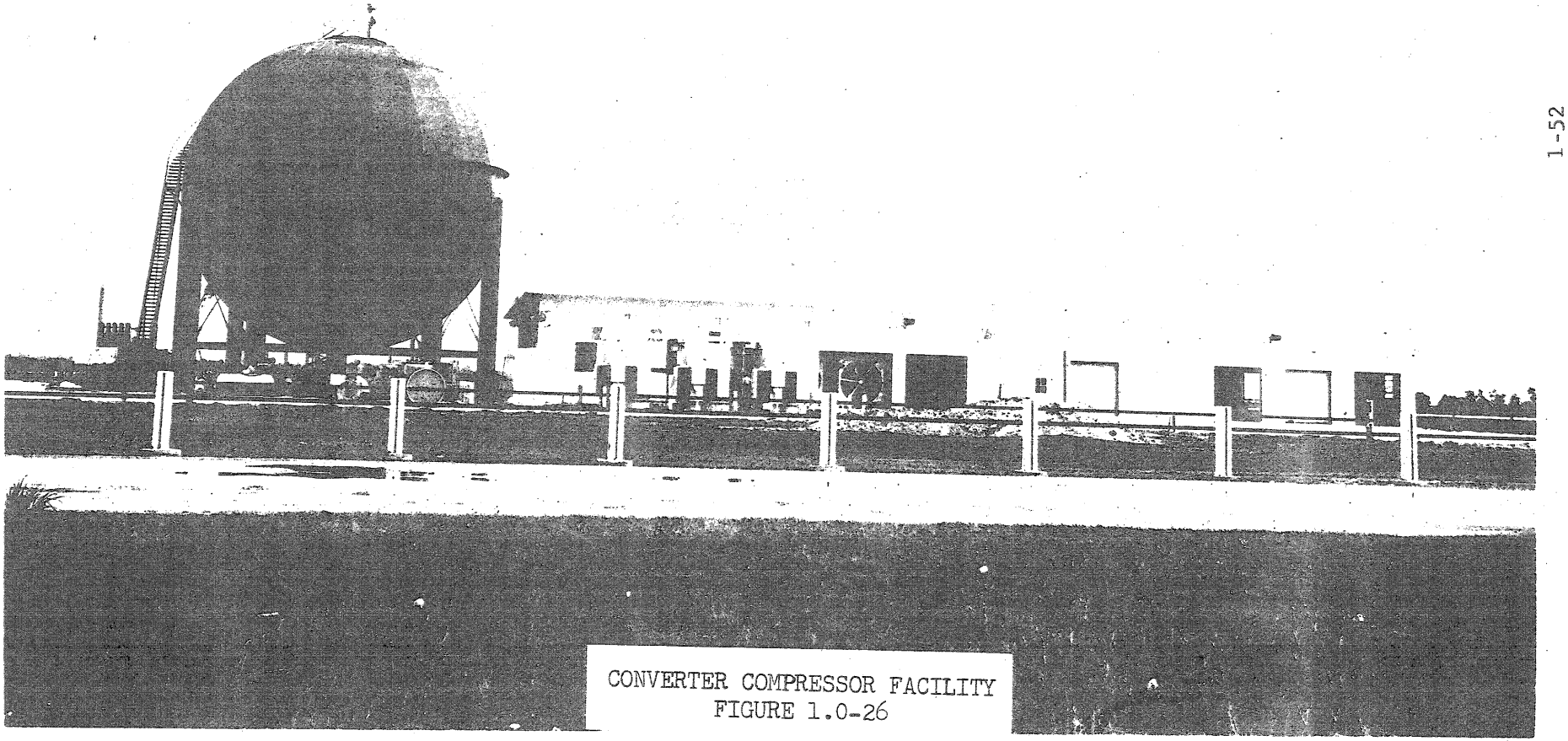

CONVERTER COMPRESSOR FACILITY
FIGURE 1.0-26

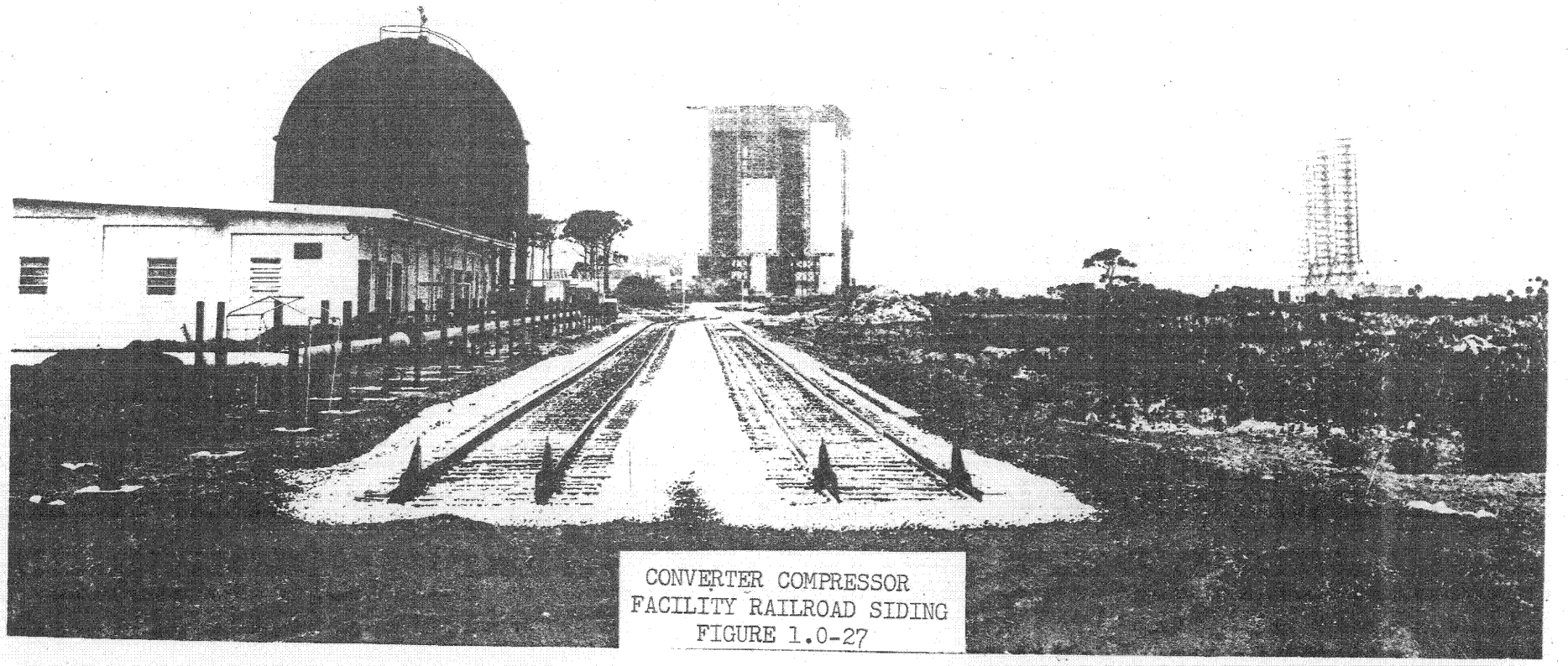

CONVERTER COMPRESSOR
FACILITY RAILROAD SIDING
FIGURE 1.0-27

h. Helium and nitrogen gas drier/purifiers.

i. Transfer facilities for liquid nitrogen and gaseous helium from transporter trucks and tube bank rail cars, respectively.

j. Data link transmission cable tunnel.

The 500,000 gallon storage tank for the liquid nitrogen is located adjacent to the equipment building that houses the evaporators for conversion of the LH_2 to high pressure gas. The liquid nitrogen storage tank is a double wall perlite insulated tank with a 50-foot diameter outer shell of carbon steel, and a 40-foot diameter inner tank of 300 series stainless steel. Operating pressure of the tank is 25 psig. The liquid nitrogen is transferred to the vaporizer-compressors by pressurizing the storage tank. After vaporizing and compressing to 150 psig or 6,000 psig, the gaseous nitrogen is piped to the distribution lines supplying the VAB area (6,000 psig) and the pad (150 psig and 6,000 psig). See Figures 1.0-28 and 1.0-29. The gaseous helium is stored in tube-bank rail cars. These are then connected to the facility via a common manifold and a flexible one inch inside diameter high-pressure line. The helium passes through the CCF helium compressors which boost its pressure from the tube-bank storage pressure to 6,000 psig after which it is piped to the VAB and pad high-pressure storage batteries.

The CCF is air-conditioned to maintain 76° FDB$\pm 2^{\circ}$, and 50% RH$\pm$5% by a heat pump. Electrical power service to the CCF is by two "Industrial" power feeders from Switch Station No. 1A to a split primary bus 13.2 KV-227/480V substation at the CCF. Illumination intensity in equipment, maintenance and office areas is 50 foot candles measured at 3'-0" above the floor. Industrial-type fluorescent fixtures supply interior lighting.

HIGH PRESSURE GAS FACILITY
C/C TO VAB AREA

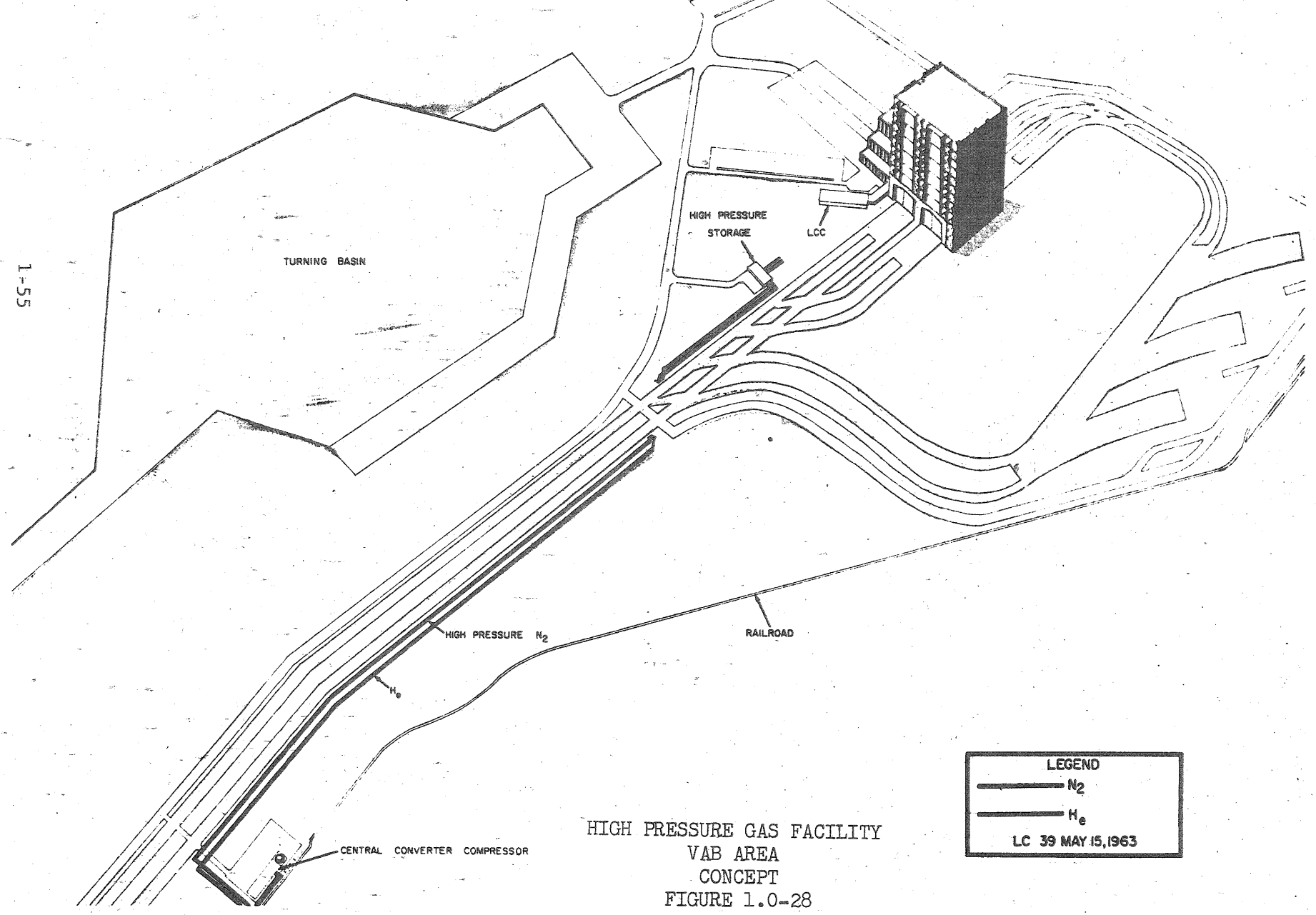

HIGH PRESSURE GAS FACILITY
VAB AREA
CONCEPT
FIGURE 1.0-28

HIGH PRESSURE GAS FACILITY
PAD AREA

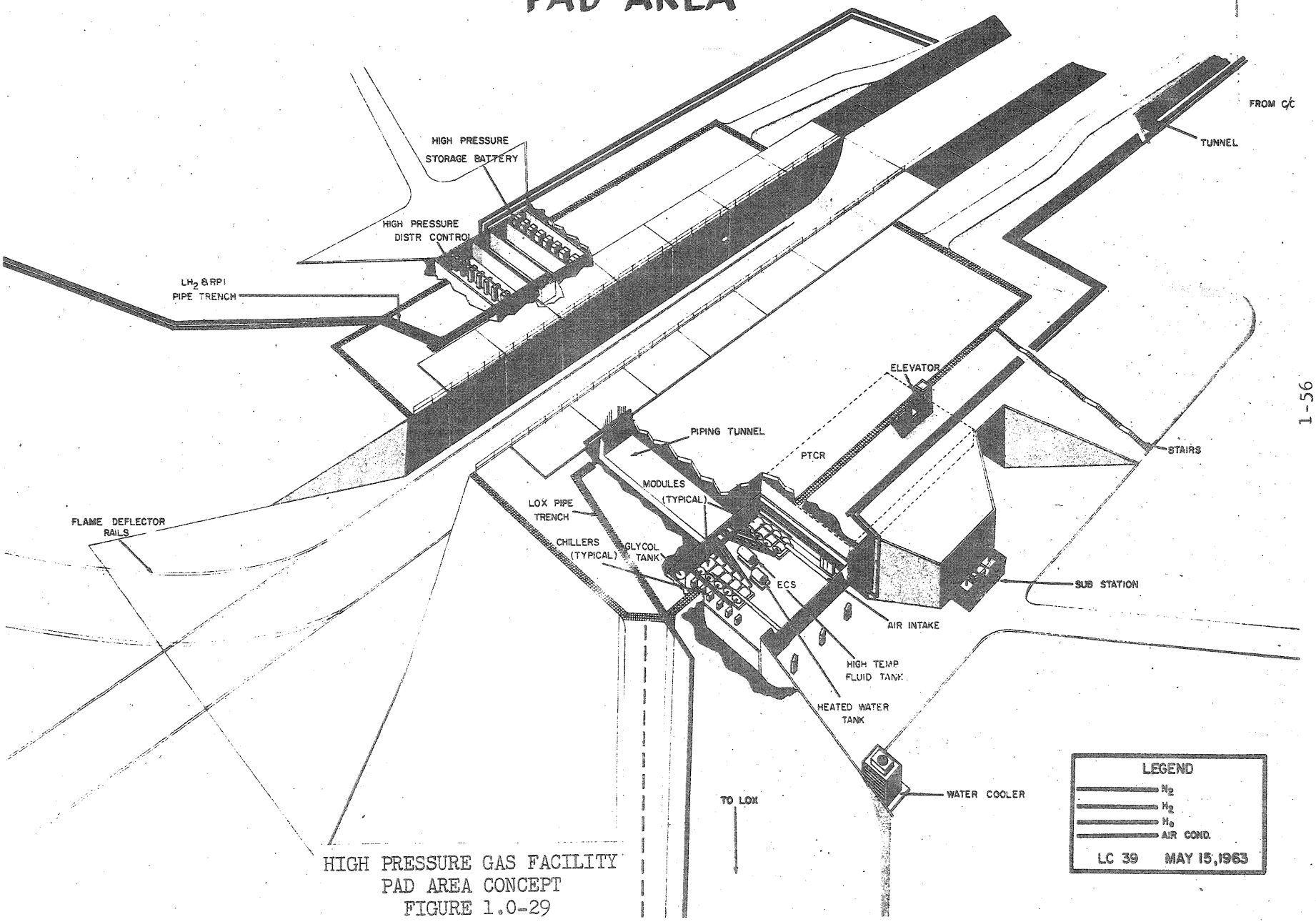

HIGH PRESSURE GAS FACILITY
PAD AREA CONCEPT
FIGURE 1.0-29

Controls and displays are located in the CCF also. Monitor panels are located in the Launch Control Center to display current status of the CCF and of the gas storage batteries at the VAB and launch pad. Mass flow rates of high-pressure helium, high-pressure nitrogen, and low-pressure nitrogen gases leaving the CCF are monitored on panels located in the CCF.

Transducers and thermo-couplers are used to sense the pressure and temperatures of the gases in the high-pressure storage batteries. These data are then amplified and sent to the LCC via the Propellant Loading Data Transmission System where they are displayed and transmitted to the CCF for display and control.

Instrumentation cables carrying signal data are routed through the instrumentation terminal distributor located in the CCF via cableway ducts running between the CCF and the VAB, LCC and Pad.

1.14.2 High Pressure Gas Storage - VAB Area.

1.14.2.1 Function. The High-Pressure Gas Storage Facility at the VAB provides high-pressure gaseous helium and nitrogen for use with the launch vehicle stages, etc.

1.14.2.2 Location. The High-Pressure Gas Storage Facility is located east of the VAB, south of the crawlerway. See Figure 1.0-28.

1.14.2.3 Description. The High-Pressure (6,000 psig) Gas Storage Facility is a separate, one-story, reinforced concrete structure, approximately 83 feet by 98 feet. This structure will have a reinforced concrete removable metal panel roof deck to afford installation and removal of pressure vessels through the roof. It includes the high-pressure storage battery consisting of a 6,000 cubic foot water volume high-pressure storage

for helium and 6,000 cubic foot high-pressure storage for nitrogen water volume, together with the associated valves, gages, and filters. This facility is serviced by a 2.5-inch, 6,000 psig gaseous nitrogen line and a 1.5-inch, 6,000 psig gaseous helium line from the CCF.

1.14.3 High Pressure Gas Storage - Pad Area.

1.14.3.1 Function. The High-Pressure Gas Storage Facility at the pad provides the launch vehicle with high-pressure helium and nitrogen for the purging, pressurizing, propellant and propulsion systems.

1.14.3.2 Location. This facility is an integral part of the launch support structure located east of the pad. It is entered from ground elevation on the east side of the pad. See Figure 1.0-29.

1.14.3.3 Description. The high-pressure (6,000 psig) facilities at the pad include the high-pressure storage battery, consisting of 3,000 cubic foot water volume high-pressure storage of gaseous nitrogen and 9,000 cubic foot water volume of high-pressure storage of helium.

1.14.4 Gaseous Hydrogen Area.

1.14.4.1 Function. The gaseous hydrogen facility at the pad provides gasous hydrogen for use in S-II and S-IVB turbine start and S-II and S-IVB tank pressurization.

1.14.4.2 Location. The Gaseous Hydrogen Area is located on the pad perimeter road northwest of the liquid hydrogen facility.

1.14.4.3 Description. The gaseous hydrogen area consists of storage tanks having a capacity of 800 cubic feet, water volume, necessary valves and piping to charge the tanks, and a hard stand for the mobile recharger.

1.15 LAUNCH PAD

1.15.1 Function. The launch pad provides a stable foundation to launch Saturn V/Apollo vehicles mounted on the ML. It also provides space for the Pad Terminal Connection Room, Environmental Control Systems and fresh air in-take equipment.

1.15.2 Location. This structure is located in the center of the launch area. See Figure 1.0-30.

1.15.3 Description. The launch pad is a cellular reinforced concrete structure (See Figure 1.0-31). The top elevation of this structure is 48 feet above sea level (or 42 feet above grade elevation). The logitudinal axis of the pad is oriented N-S with the crawlerway and ramp approach from the south. Located within the fill under the west side of the structure is a two-story concrete building to house environmental control and pad terminal connection equipment. On the east side of the structure, within the fill, is a one-story concrete building to house the high-pressure gas storage battery. On the pad surface are elevators, staircases, and interface structures to provide service to the ML and the MSS. A ramp, with a 5% grade, provides access from the crawlerway. This is used by the Crawler/Transporter to position the ML/SV and the MSS on the support pedestals. The Azimuth Alignment Building is located on the approach ramp in the crawlerway median strip. A flame trench, 58 feet wide by 450 feet long bisects the pad. This trench opens to grade at the north end. The mobile wedge-type flame deflector is mounted on rails in the trench. See Figures 1.0-32 and 1.0-33.

An escape chute is provided to connect the ML to an underground hard room. This room is located in the fill area west of the support structure. The

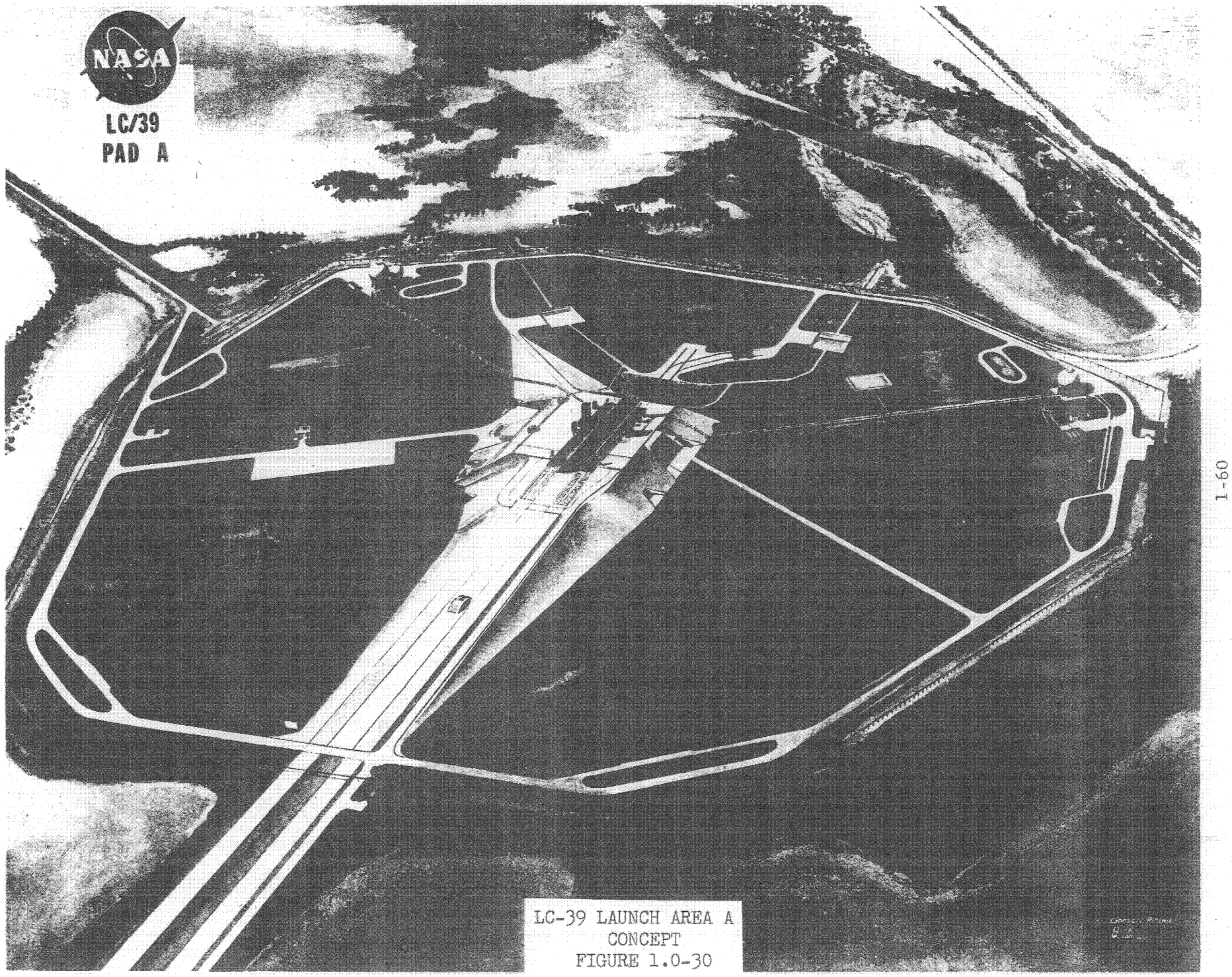

LC-39 LAUNCH AREA A
CONCEPT
FIGURE 1.0-30

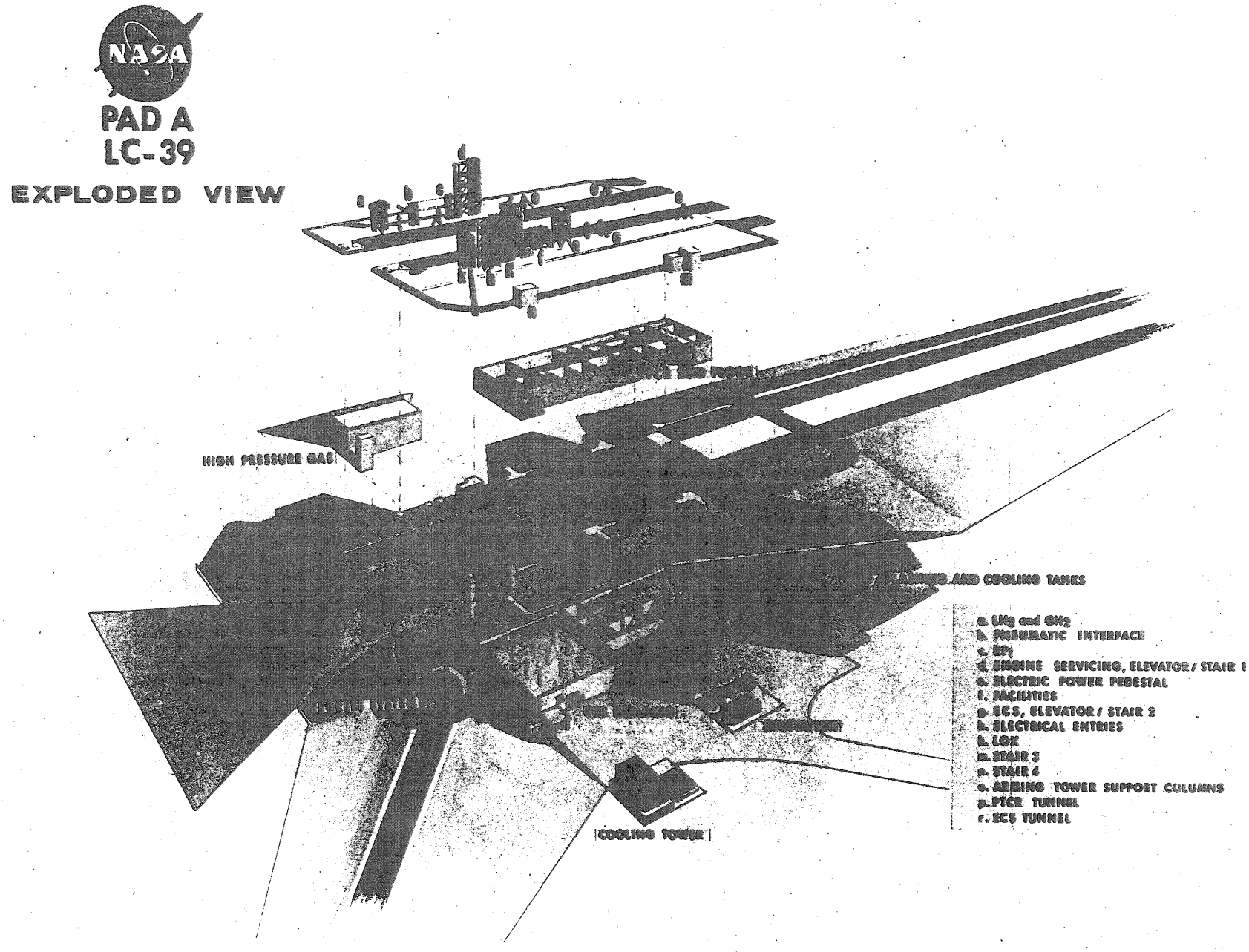

LC-39 PAD A
EXPLODED VIEW
CONCEPT
FIGURE 1.0-31

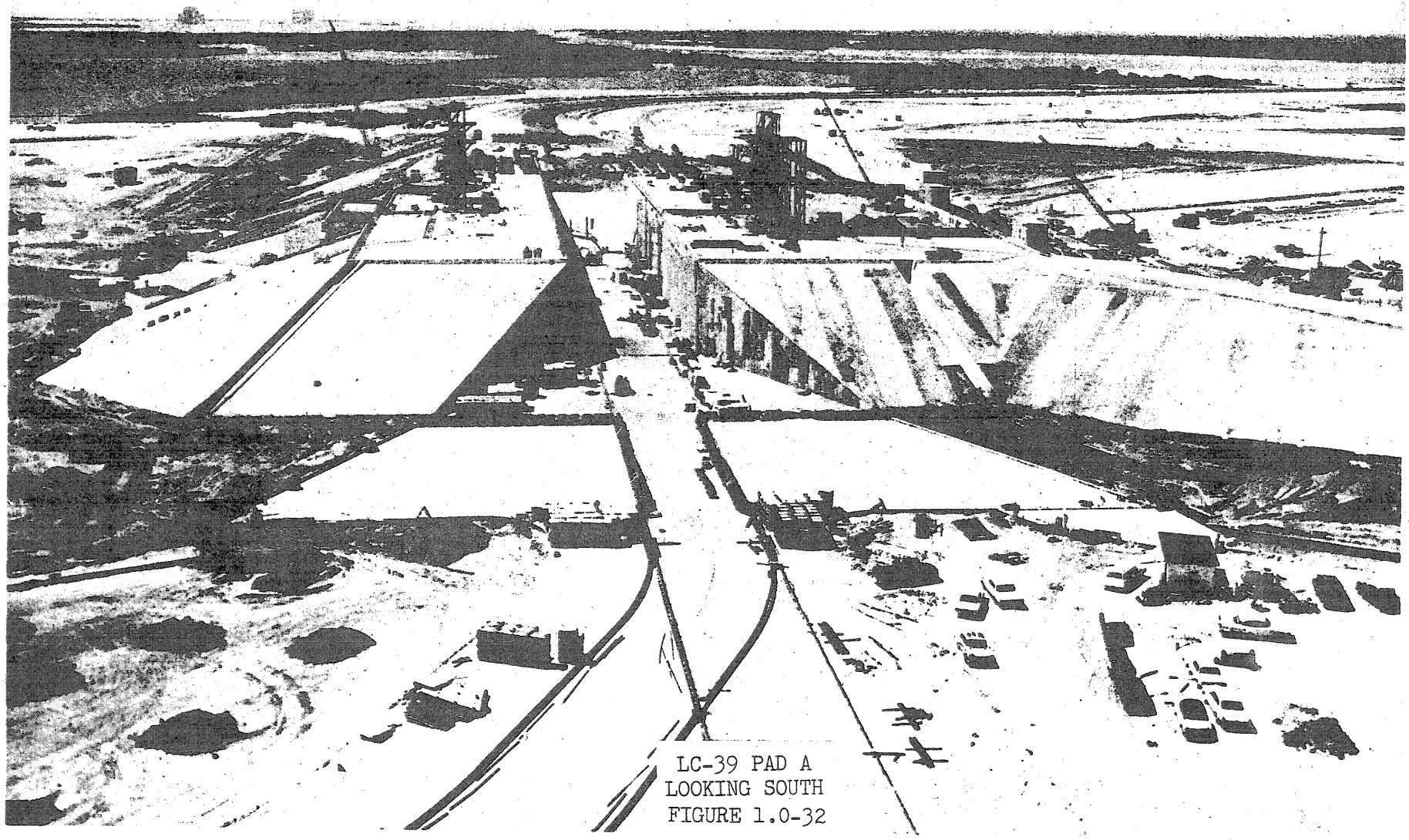

LC-39 PAD A
LOOKING SOUTH
FIGURE 1.0-32

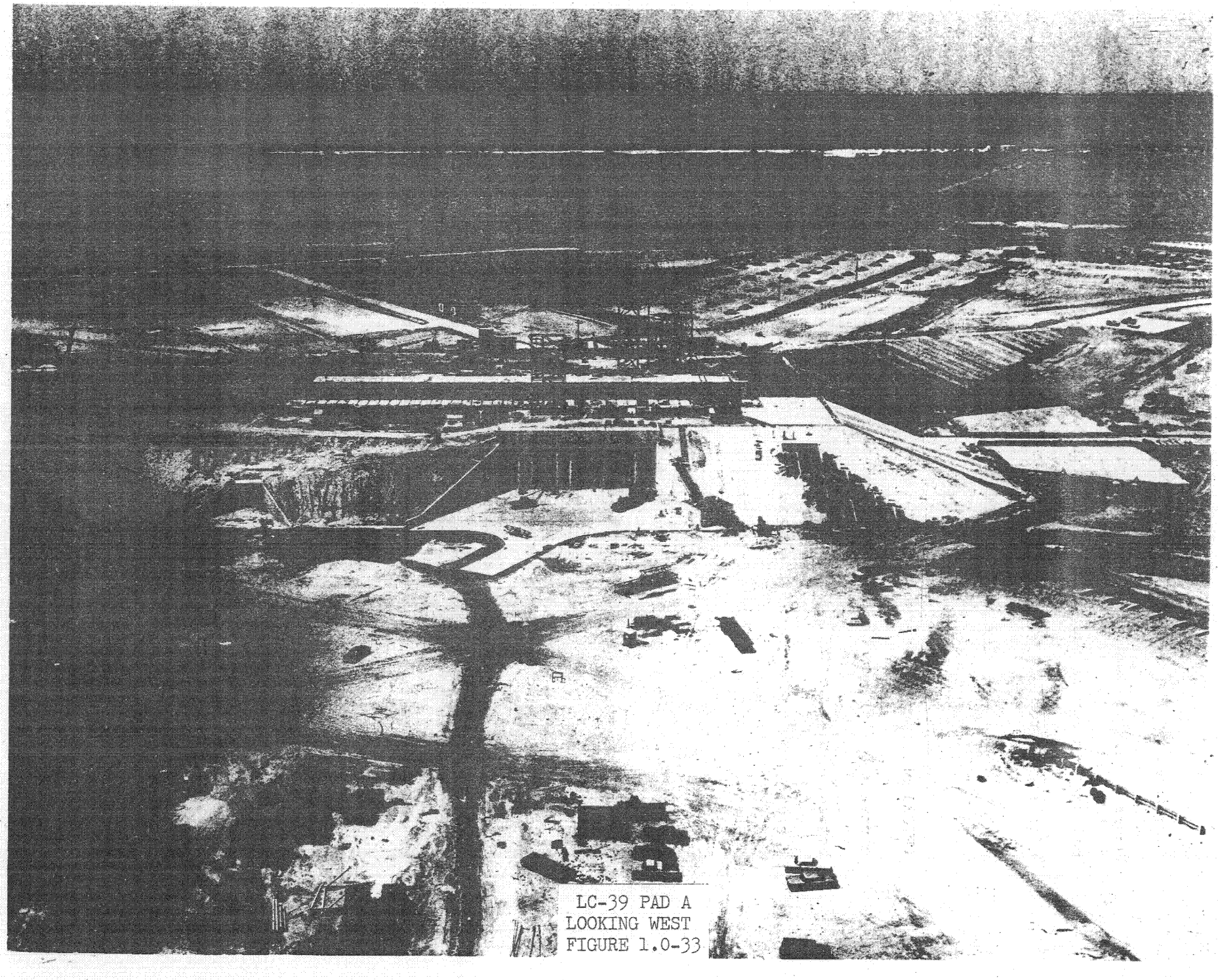

LC-39 PAD A
LOOKING WEST
FIGURE 1.0-33

room has a spring supported floor and has two entrances protected by blast-doors. This is used by astronauts and service crews in the event of a malfunction during the final phase of the countdown. Two hydraulic elevators serve from pad level to ML base.

1.15.1 Pad Terminal Connection Room.

1.15.1.1 Function. The Pad Terminal Connection Room (PTCR) provides the terminals for communication and data link transmission connections between the ML or MSS and the launch area facilities and between the ML or MSS and the Launch Control Center. This facility also accommodates the electronic equipment that simulates the vehicle and the ML functions for checkout of the facilities during the absence of the ML/SV.

1.15.1.2 Location. The PTCR is located within the fill on the west side of the launch support structure.

1.15.1.3 Description. The PTCR consists of a two-story hardened structure constructed on grade within the fill on the west side of the launch support structure. This structure will be covered with fill and the elevated pad hardstand. The launch pedestal and the deflector area are located immediately adjacent to this structure. Each of the floors of this structure measures approximately 136 feet by 56 feet. Entry is made from the west side of the launch support structure at ground level into the first floor area. Instrumentation cabling from the PTCR extends to the ML, MSS, high-pressure gas storage battery area, LOX facility, RP-1 facility, LH_2 facility, and Azimuth Alignment Building. The equipment areas of this building are equipped with elevated false floors to accommodate the instrumentation and communication cables used for interconnecting instrumentation racks and terminal distributors.

An air-conditioned environment of $75^{\circ} \pm 2^{\circ}$ FDB and 50 ± 5% RH is provided for equipment cooling. In addition, this system provides the ML, when on the pad, with chilled water for the air handling units located in the equipment compartments. The air-conditioning equipment is located on the PTCR ground floor. This facility is occupied by personnel during the early phase of pre-launch checkout activities. The air-conditioning system will be remotely controlled from the LCC when personnel are evacuated for launch. A hydraulic elevator serves the two floors and the pad level.

Electrical power to this facility will be "industrial" 277/480v and "instrumentation" 120/208v from a nearby substation. Illumination intensity in all equipment areas will be 70 foot candles measured at 30 inches above the floor using standard industrial fluorescent fixtures. Provisions have also been made in each equipment area for a grounding system which is isolated from all other grounds.

1.15.2 Environmental Control System Room.

1.15.2.1 Function. This room houses the environmental control system equipment, which furnishes temperature and/or humidity controlled air or nitrogen for Space Vehicle cooling at the pad.

1.15.2.2 Location. The ECS room is located in the pad fill west of the support structure and north of the PTCR.

1.15.2.3 Description. The ECS room is 96 feet wide by 112 feet long. The room houses air and nitrogen handling units, liquid chillers, air compressors, and auxiliary electrical and mechanical equipment.

The major equipment consists of the following:

a. 3-1050#/min. - 4 psig air compressors.

b. 2-60#/min. - 4 psig air compressors.

c. 3-250 Ton liquid chillers

d. 1-3,000 gallon water/glycol storage tank.

e. 2-1050#/min. cooling coil units.

f. 1-60#/min. cooling coil units.

g. Air reheat units.

h. 4-20 Ton self-contained A/C units for room and equipment cooling. The ECS room environment is maintained at $80^{\circ} \pm 2^{\circ}$ FDB and 60%±5% RH.

1.15.3 Air Intake Building.

1.15.3.1 Function. This building houses fans and filters for the air supply to the PTCR, flame trench and ML.

1.15.3.2 Location. The Air Intake Building (See Figure 1.0-34) is located west of the pad between the pad and the perimeter road.

1.15.3.3 Description. The building is 20 feet by 26 feet. It contains three fans. One supplies 10,735 CFM to the PTCR; one supplies 1,325 CFM to the ML; and one supplies 3,110 CFM to the flame trench.

1.16 PROPELLANT FACILITIES

1.16.1 Function. The propellant facilities store and transfer RP-1, LOX and LH_2 between storage and the vehicle.

1.16.2 Location. The propellant facilities are located within the launch pad area, on the pad side of the perimeter road. Each facility is approximately 1450 feet from the center of the pad. The LH_2 and RP-1 facilities are in the northeast quadrant of the pad area. The LOX facility is in the northwest

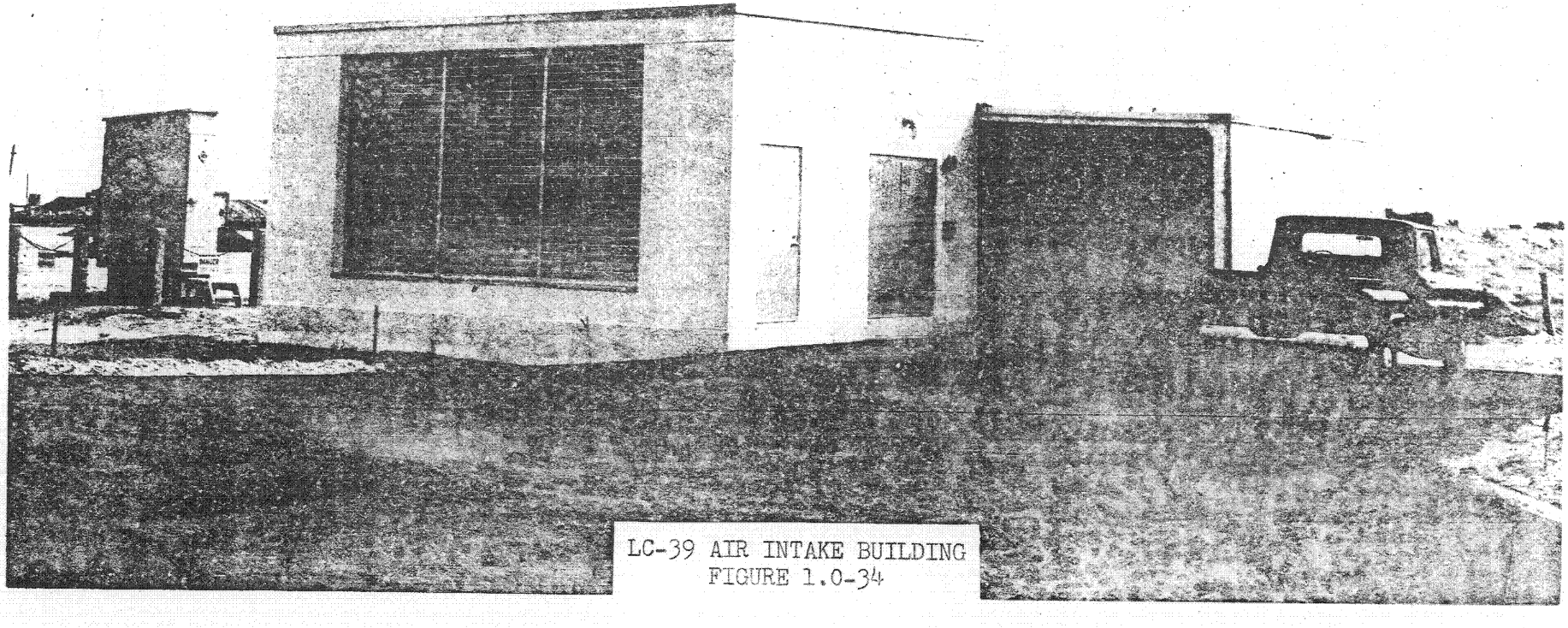

LC-39 AIR INTAKE BUILDING
FIGURE 1.0-34

quadrant of the area. The two RP-1 holding ponds are north of the pad. One is east of the N-S pad axis and the other is west of the axis. The hydrogen burn pond is between the pad and the LH_2 facility.

1.16.3 Description.

1.16.3.1 RP-1 Facility. The RP-1 facility consists of three 86,000 gallon storage tanks, pump house - 51 feet by 22 feet , one 1000 gpm - 315 feet T. Hd. circulating pump, one 2,000 gpm - 500 feet T. Hd. Transfer pump, 2 - filter separators, 600 gpm each, an 8-inch stainless steel cross-country line to the ML interface, RP-1 foam generating building - 10 feet by 12 feet, and necessary valves, piping and controls. See Figures 10.-35 and 1.0-36.

1.16.3.2 LH_2 Facility. The LH_2 facility (See Figures 1.0-37 and 1.0-38) consists of one 850,000 gallon (working capacity) storage tank, tank RP-1 and LH_2 electrical building - 17 feet by 27 feet, vaporizer, and a 10-inch invar cross-country line to the ML interface.

The storage tank is a dewar with a stainless steel inner shell and a carbon steel outer shell. The annular space is filled with perlite and the air evacuated to 50 microns. The tank vaporizer converts liquid hydrogen to gaseous hydrogen and pressurizes the storage tank to 75 psig. The cross-country transfer line is vacuum jacketed with a stainless steel outer jacket.

1.16.3.3 LOX Facility. The LOX facility (See Figures 1.0-39 and 1.0-40) consists of one 900,000 gallon (working capacity) storage tank, tank vaporizer, LOX electrical building - 15 feet by 32 feet, 2 - main fill 10,000 gpm - 710 feet T. Hd. pumps, 2 - replenish 1,000 gpm - 520 feet T. Hd. pumps, a 14-inch transfer cross-country line, and a 6-inch

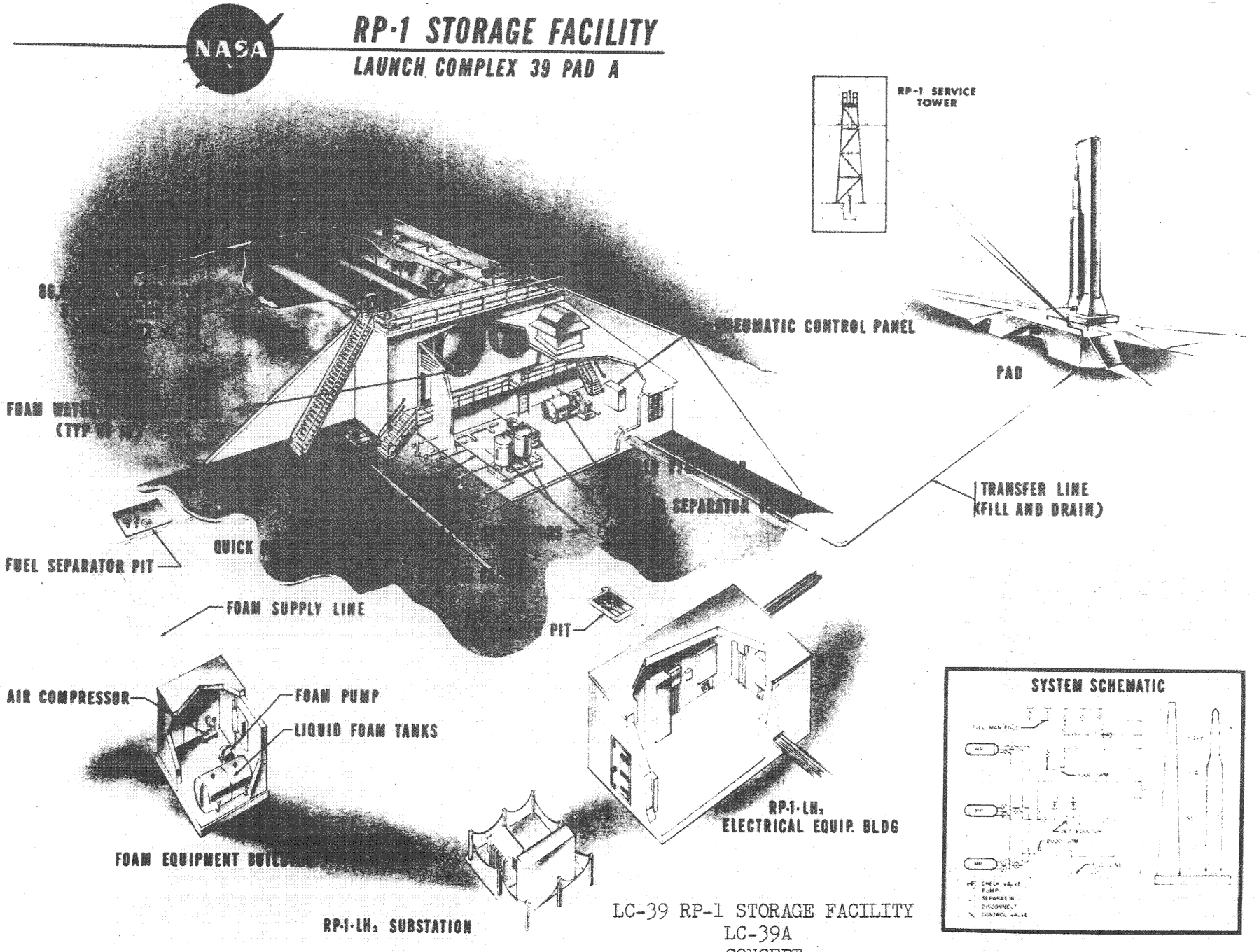

LC-39 RP-1 STORAGE FACILITY
LC-39A
CONCEPT
FIGURE 1.0-35

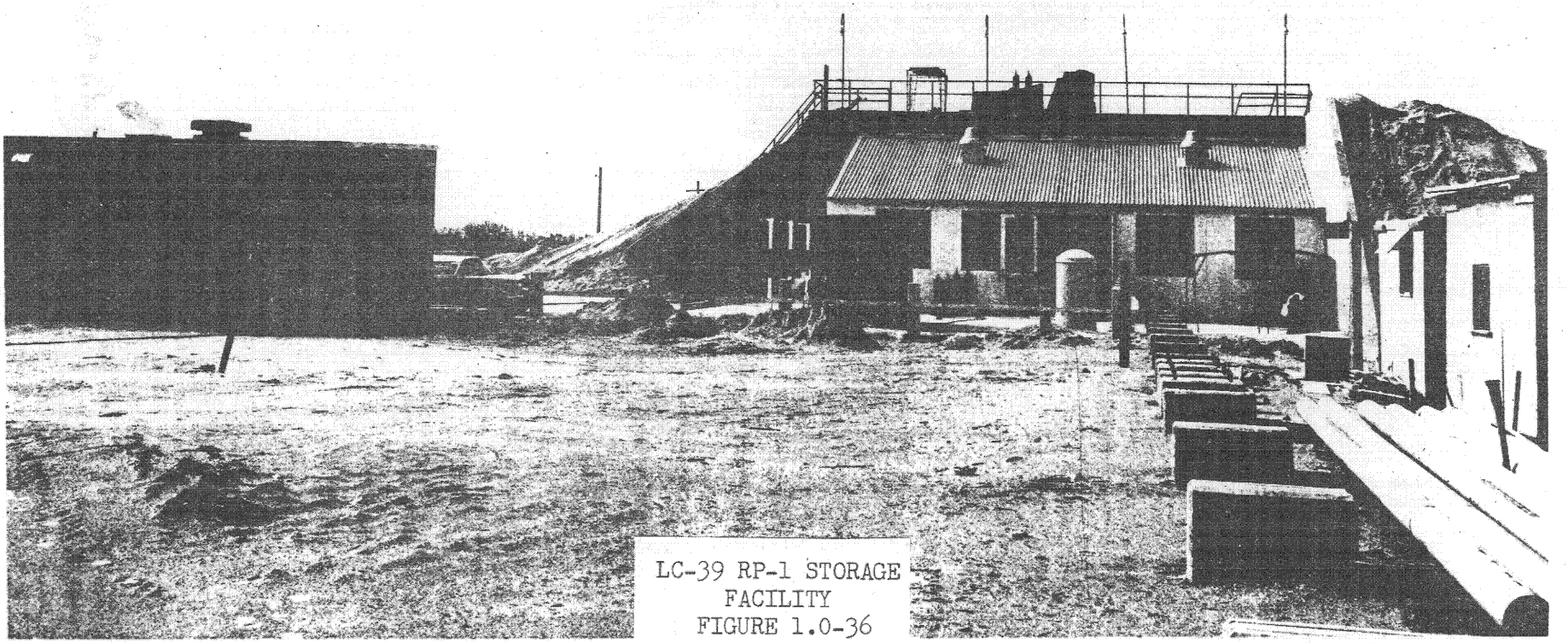

LC-39 RP-1 STORAGE
FACILITY
FIGURE 1.0-36

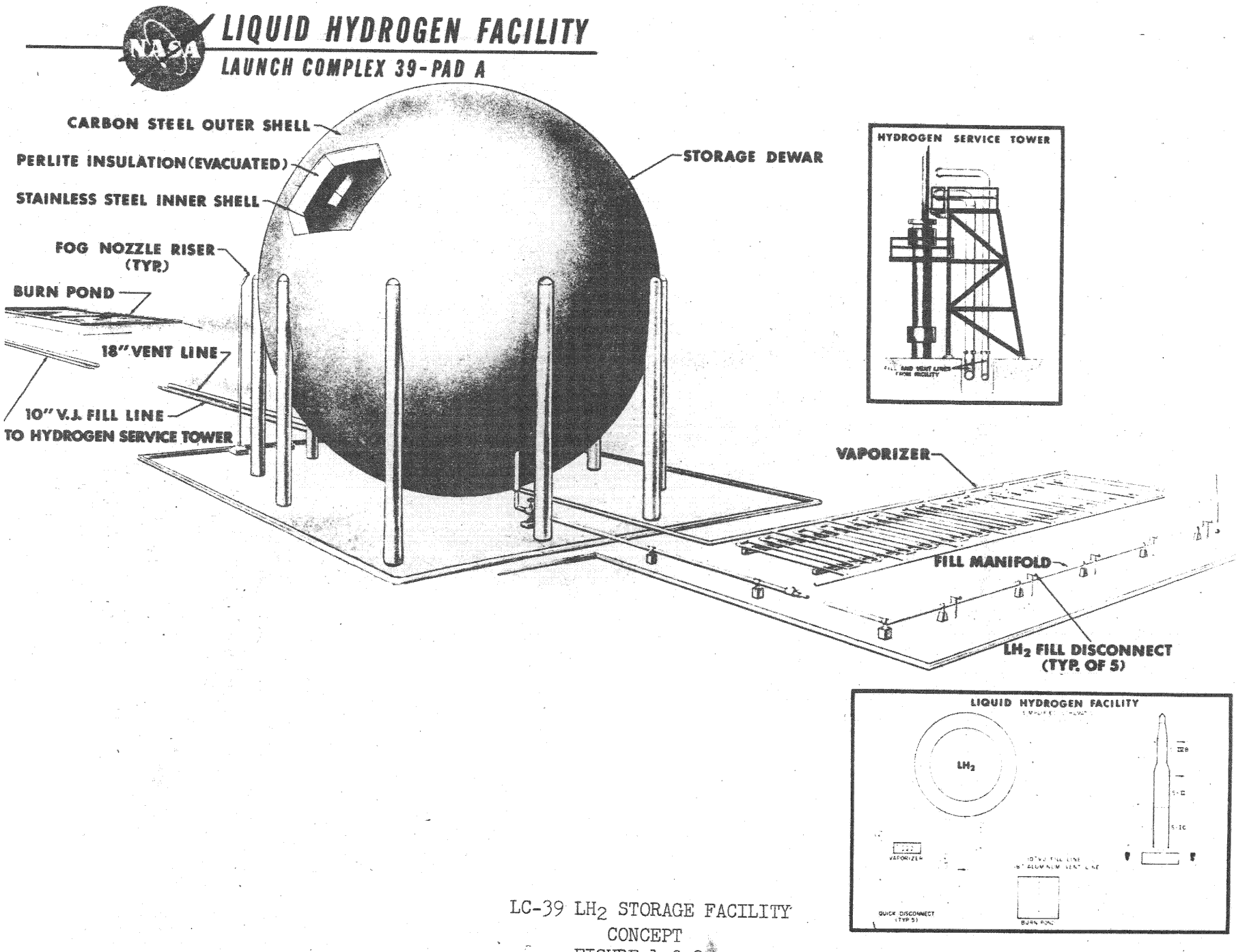

LC-39 LH_2 STORAGE FACILITY
CONCEPT
FIGURE 1.0-3

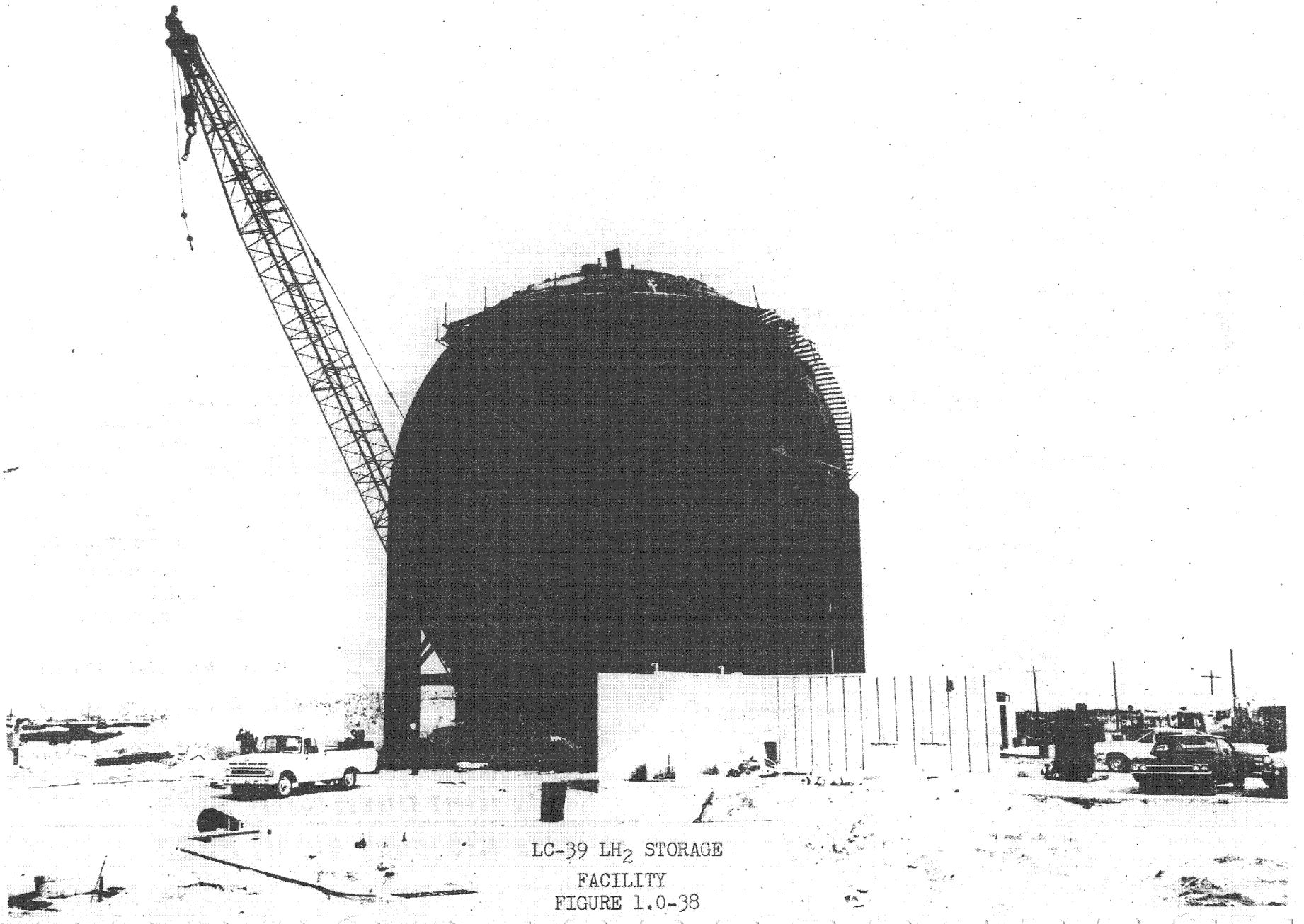

LC-39 LH_2 STORAGE
FACILITY
FIGURE 1.0-38

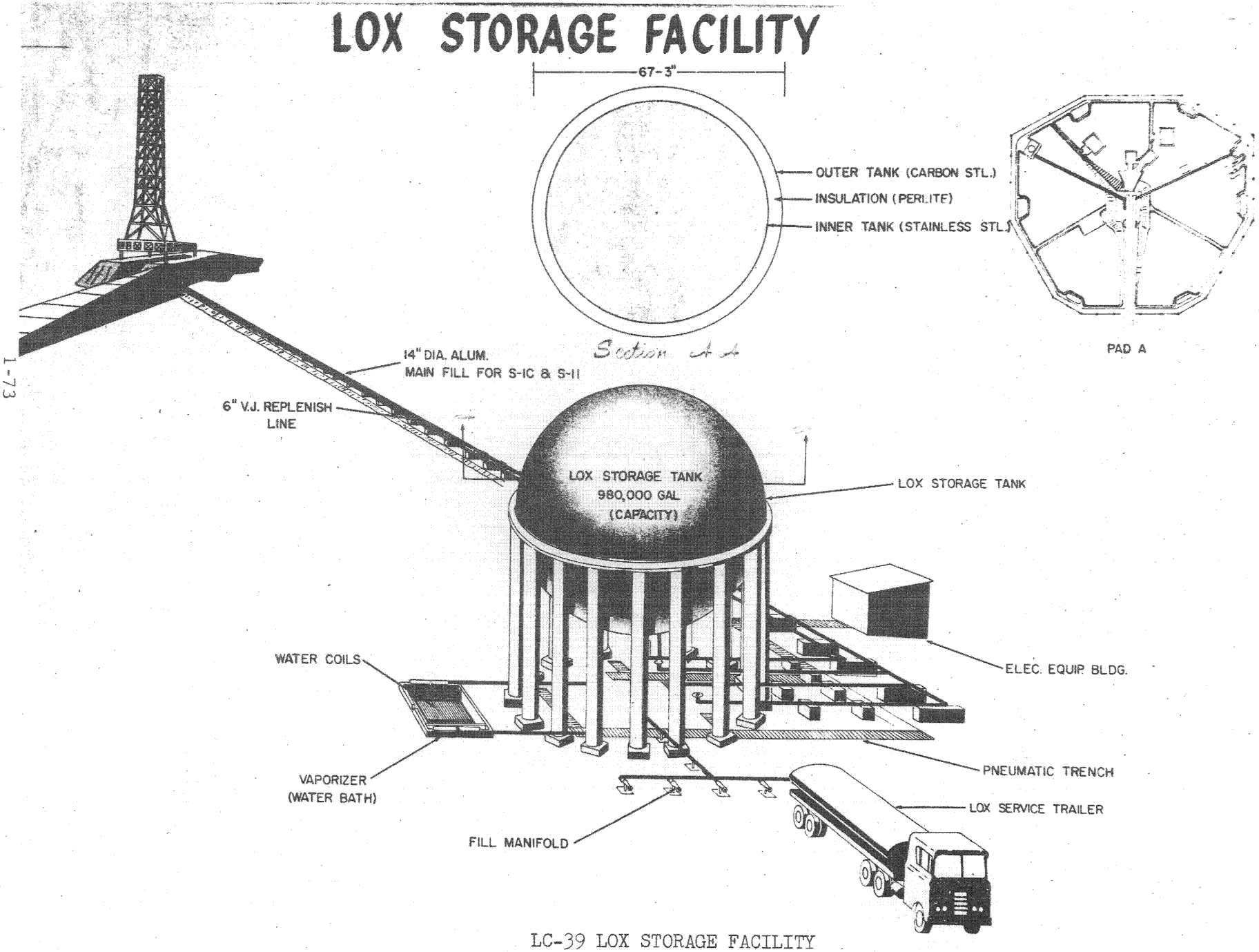

LC-39 LOX STORAGE FACILITY
LC-39A CONCEPT
FIGURE 1.0-39

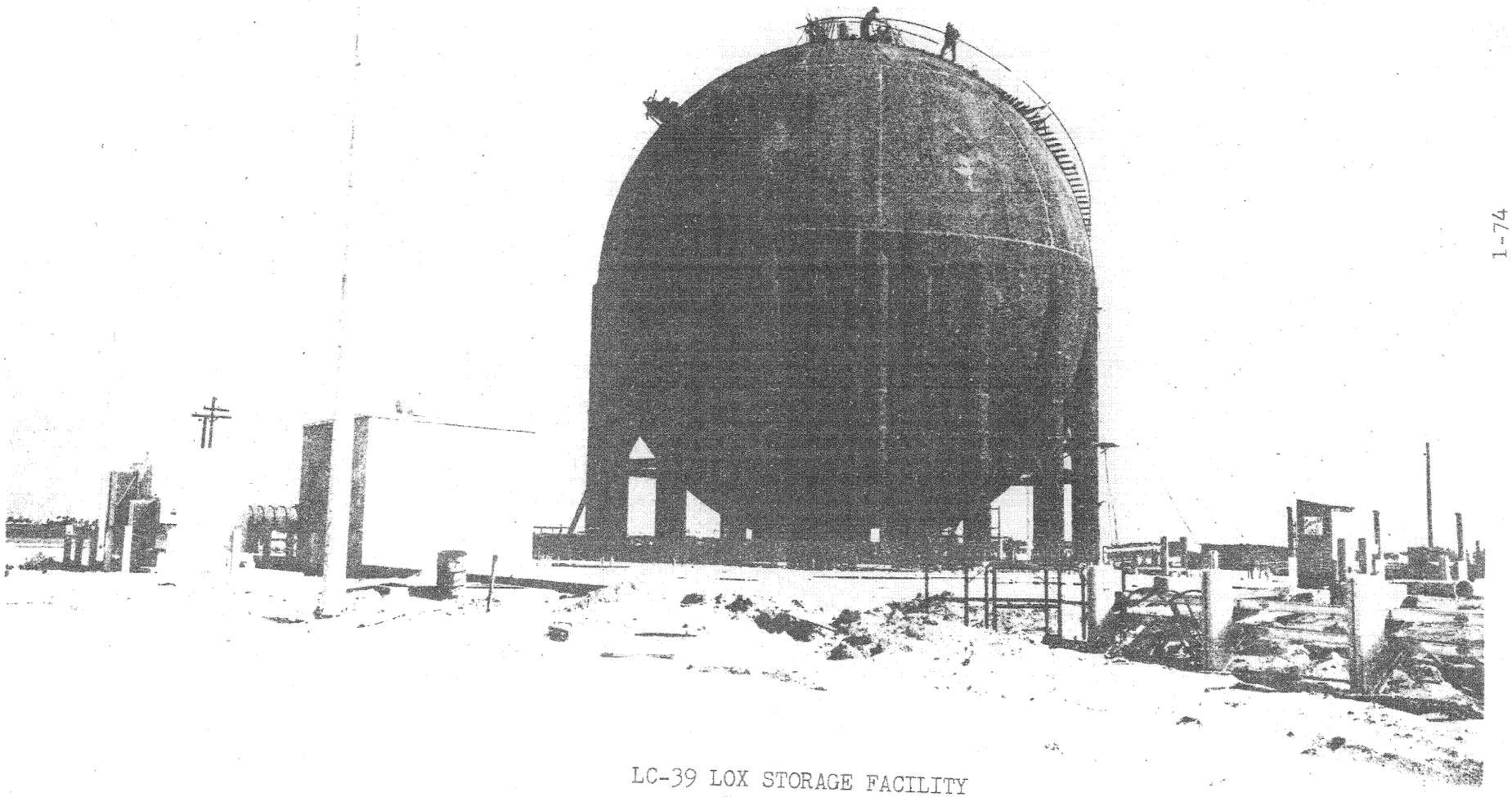

LC-39 LOX STORAGE FACILITY
FIGURE 1.0-40

transfer cross-country line. The storage tank is a dewar with the inner shell of stainless steel and an outer shell of carbon steel. The annular space is filled with perlite and a positive pressure of nitrogen.

The tank vaporizer converts liquid oxygen to gaseous oxygen for pressurizing the storage tank to 10 psig. The 14-inch transfer line is aluminum. The 6-inch transfer line is invar with a stainless steel jacket.

1.16.3.4 Holding Ponds. The holding ponds are 150 feet by 250 feet with a water depth of two feet. A trap retains spilled RP-1 and discharges the water to drainage ditches. See Figure 1.0-41.

1.16.3.5 Burn Pond. The burn pond is 100 feet by 100 feet. A piping system with bubble caps provides a method for disposing of vented hydrogen. A hot wire ignition system maintains the burning process. The water depth is 2'7". See Figure 1.0-42.

1.17 OPERATIONS SUPPORT BUILDINGS

1.17.1 Function. The Operations Support Buildings at the launch pad area provides pre-launch support to the propellant facilities.

1.17.2 Location. The buildings are located in the vicinity of launch pad, LOX, RP-1 and LH_2 storage facilities.

1.17.3 Description. Two single storage structures, 30 feet by 30 feet and 35 feet and 35 feet serve as workshops for the LOX and the RP-1/ LH_2 propellant facilities. The buildings are windowless concrete block structures with an exterior personnel door and one 10 foot by 10 foot roll-up metal door. Interior partitions are of dry wall construction. Each building will contain toilet-locker room facilities, heating and air-conditioning equipment, air compressor and mono-rail hoist. The air compressor and tank

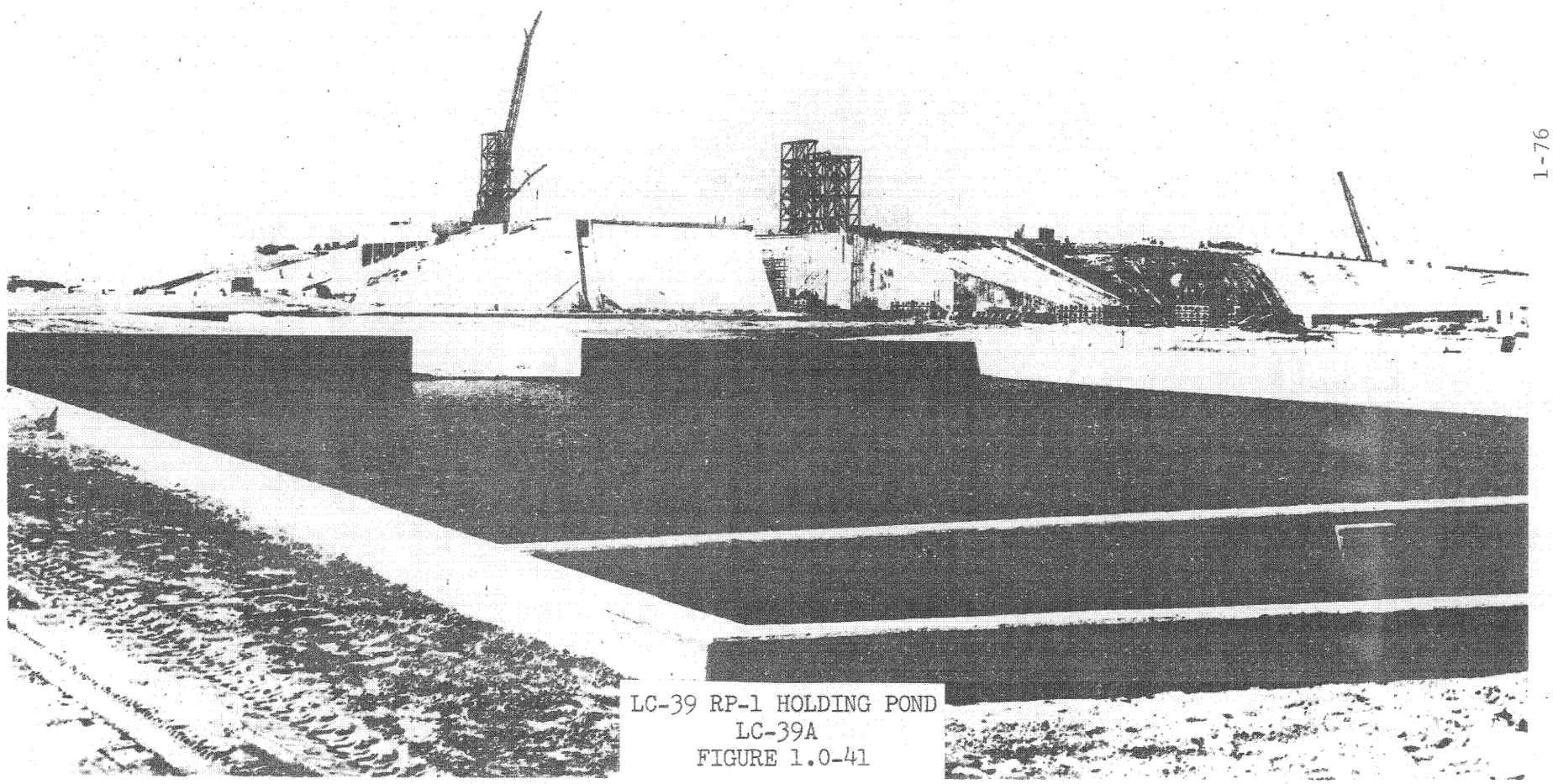

LC-39 RP-1 HOLDING POND
LC-39A
FIGURE 1.0-41

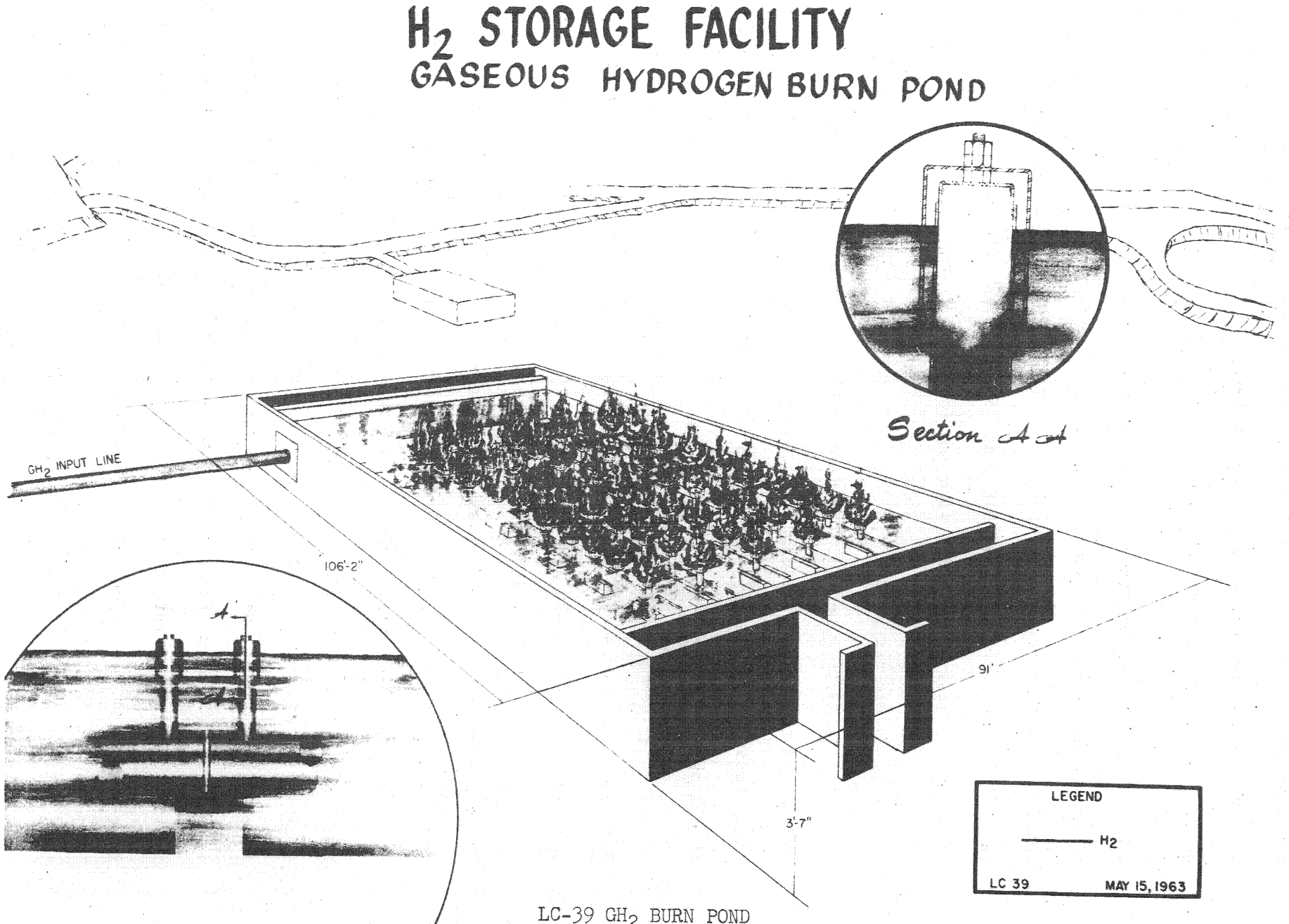

LC-39 GH_2 BURN POND
LC-39A CONCEPT
FIGURE 1.0-42

can provide 20 SCFM of air at 125 psi. A 6,000 pound capacity trolley mounted mono-rail hoist is installed in each facility on the centerline of the roll-up door. The minimum clear hook height of the hoists is 10 feet.

The smaller of the two structures is located on the pad perimeter road west of the Launch Area, approximately 200 feet north of the LOX propellant facility. The larger of the Operations Support Buildings, 35 feet by 35 feet, is located on pad perimeter road east of the Launch Area. This structure is east of the RP-1 site and southeast of the LH_2 site.

1.18 FLAME DEFLECTOR

1.18.1 Function. The Flame Deflector protects the boat-tail section of the Saturn V launch vehicle and the launch stand from hot gases, high pressures and flame generated by the launch vehicle during the period of engine ignition and lift-off.

1.18.2 Location. There are two flame deflectors provided at each pad, one for use and the other held in reserve. Their normal parking position is north of the launch support structure within the launch pad area.

1.18.3 Description. The flame deflector is constructed of structural steel beams and trusses which support a steel skin. The skin is covered with at least four inches of ceramic material capable of withstanding the direct flame and pressure effects of the S-IC exhaust. The deflector is designed to move via a rail system from the normal parking position to a position at the launch support structure. This launch position is at ground level underneath the ML thrust chamber. The flame deflector is secured in this position at the pad by shear plates lowered into slots provided in the concrete at the pad. Each deflector is 77 feet long by 48 feet wide by 41 feet high and weighs approximately 1,000,000 pounds.

Temperature sensors are imbedded in the ceramic coating. Strain gages are attached to the structural members.

1.19 AZIMUTH ALIGNMENT BUILDING

1.19.1 Function. The Azimuth Alignment Building (See Figure 1.0-43) houses the auto-collimater theodolite which senses, by a light source, the rotational output of the stable platform.

1.19.2 Location. The Azimuth Alignment Building is located approximately 700 feet from the ML positioning pedestals between the crawlerway of the approach ramp to each launch pad.

1.19.3 Description. Construction of this building is of poured concrete with a minimum thickness of one foot for exposed portions. Entrance to this area is through an explosion-proof door at the end of a sloping ramp located on the side away from the vehicle. Usable area of the building is approximately 756 square feet.

A short pedestal with a spread footing isolated from the building is provided as a mounting surface for the theodolite instrument. The distance from the center line of the theodolite to the center line of the space vehicle is 765 feet, 7 1/6 inches. A theodolite elevation angle of 24 degrees provides line-of-sight to the stable platform.

Data from the auto-collimater theodolite is fed through the platform and the ESE Computer Complex for comparison with the desired coordinated system. Corrections to the pre-set coordinate are sent to the "Y" axis gyro of the stable platform to return the stable platform to the desired coordinate.

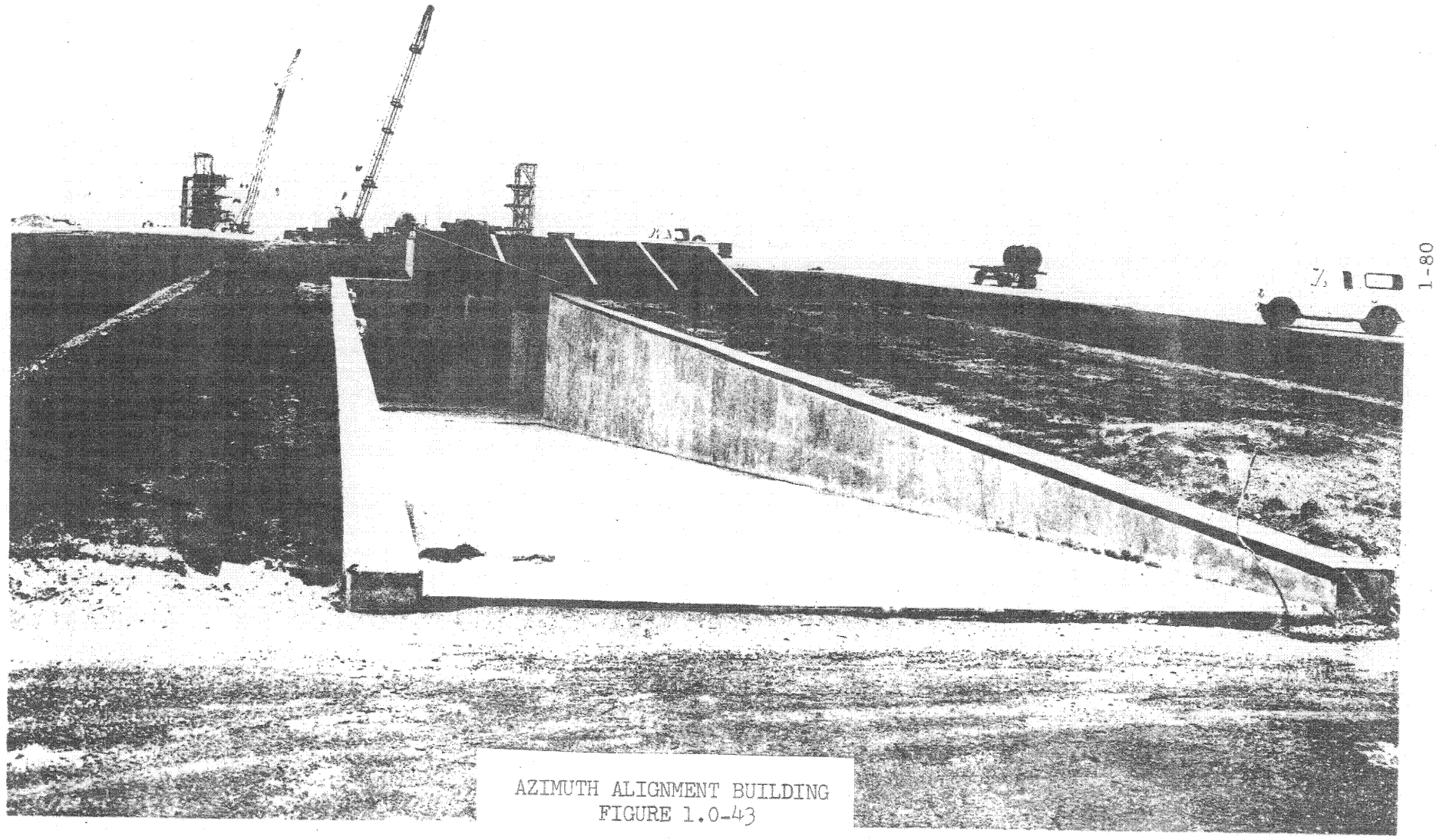

AZIMUTH ALIGNMENT BUILDING
FIGURE 1.0-43

1.20 LAUNCH AREA CAMERA SITES

1.20.1 Function. These facilities support camera and CCTV equipment to provide real time viewing and photographic documentation coverage as required.

1.20.2 Location. Camera site facilities are located around the launch support structure on the inside of the perimeter service road of the launch pad area.

1.20.3 Description. There will be a total of six camera sites in the launch pad area. All six sites have an access road, five concrete camera pads, a target pole, communication boxes, and a power transformer with distribution panel and power boxes. These sites will cover pre-launch activities and launch operations from six different angles at a radial distance of approximately 1,300 feet from the launch vehicle.

The five concrete pads at each six camera sites are for the following equipment: four Engineering Sequential Cameras; and one CZR Camera. The four pads for the Engineering Sequential Cameras are six feet wide by 16 feet long and slightly above existing site grade elevation. These pads are in line and are sited with the long dimension aligned on tangent lines to the line-of-sight to the launch vehicle. Elevation of these pads and the site is approximately 18 feet above MSL or 10 feet above the perimeter road. The CZR (Metric) Camera pad is 6 feet wide by 10 feet long and is 25 feet from the nearest Engineering Sequential Camera pad. This pad is aligned the same as the four Engineering Sequential Camera pads. A CZR Truck parking area is provided adjacent to the CZR pad.

A target pole for optical alignment of the CZR Camera is located approximately 225 feet ± 25 feet from the CZR Camera pad and is approximately 86 feet high.

This pole is located between two and three degrees on the down range side of the CZR Camera line-of-sight to the launch vehicle. Four illuminated target boxes are equally spaced on the pole so that the bottom box is approximately in line-of-sight with the base of the vehicle on the pad as viewed by the CZR Camera. Communication furnished to the site is part of the Universal Camera Control System (U.C.C.S.) network. A post-mounted weatherproof box is located between the four Engineering Sequential Camera pads and at the CZR Camera pad. An outdoor 75 KVA transformer, 480-120/208V, is installed at each site to satisfy the power requirements. Power is distributed from this pad through a post-mounted panel to two U.C.C.S. power boxes located at the Engineering Sequential Camera pads and one at the CZR Camera Pad.

1.21 INSTRUMENTATION BUILDING

1.21.1 Function. The Instrumentation Building houses the ODOP-UDOP transmitter.

1.21.2 Location. The building (See Figure 1.0-44) is located on Instrumentation Road, south of Saturn Causeway.

1.21.3 Description. The building is approximately 36' by 90' and is one story. The rooms consist of an office, workshop and laboratory, record storage room, communications room, mechanical equipment room and a main operation room. The main operations room is RF shielded. This room is approximately 34 feet by 48 feet. A 200-foot antenna tower is located approximately 50 feet south of the building.

VEHICLE ASSEMBLY AREA
INSTRUMENTATION BUILDING
AND ANTENNA
FIGURE 1.0-44

2.0 LAUNCH COMPLEX 39 SUPPORT SYSTEMS

This section describes the ground support systems used in conjunction with space vehicle checkout and launch, and those systems which, in addition, provide day by day support of Launch Complex 39 activities such as, communications, fire protection, heating-ventilating and air conditioning, power, etc.

2.1 OPERATIONAL INTERCOMMUNICATION SYSTEM

2.1.1 Function. The Operational Intercom System (OIS) is the primary voice communication medium used for coordinating the preparation, checkout, countdown, and launching of space vehicles.

2.1.2 Description. Two types of operational intercommunication systems are used for NASA facilities on MILA. They are the Radio Frequency-Operational Intercom System (OIS-RF) and the Audio-Operational Intercom System.

2.1.2.1 Radio Frequency-Operational Intercom System (OIS-RF). The OIS-RF is a 112 channel single-sideband suppressed-carrier frequency-multiplexed intercommunication system. Each station of the system may select any one channel for voice duplex and another channel for sidetone monitor. Voice operated transmission control is also provided.

The hub of the OIS-RF is the Communications Control Center located in the LCC. From the LCC, distribution of coaxial and wideband cable extends to 22 local communications areas (LCA) and their operator stations. The Communications Control Center provides a master pilot tone on the cable to the LCA's. A pilot tone is required for the OIS-RF frequency multiplexing techniques. The Communication Control Center also contains the following OIS-RF equipment:

a. UHF radio (10 channels of the OIS-RF).

b. 112 channel baseband recorders.

c. Selective channel recorders.

d. Fault alarm and display.

e. Remote Control for activating or isolating LCA's.

f. Interface to Operational Paging System.

g. Interface to OIS-A.

h. Interface to Communications systems external to LC39.

i. Emergency OIS-RF power.

Selected operator stations have an all-call transmit capability. This permits the operator immediate access to every station in the system.

2.1.2.2 Audio-Operational Intercom System (OIS-A). There are two types of Audio Intercom Systems (OIS-A), a 21 channel and a 2 channel system.

2.1.2.2.1 21 Channel OIS-A. The 21 channel OIS-A systems are installed on MILA (not programmed for LC39). This type of OIS-A is designed around high-gain, solid-state amplifiers and utilizes multiconductor cable for transmission. A wide-range automatic-gain-control is built into the operator instrument; therefore, preventing unnecessary volume adjustments. This OIS system is compatible with other range communication systems.

2.1.2.2.2 2 Channel OIS-A. The 2 channel OIS-A is provided for Launch Complex 39. This system contains 23 networks with approximately 300 operator stations. The system incorporates the features of 21 channel OIS-A and also includes a supervisory call indicator.

2.2 OPERATIONAL PAGING SYSTEM

2.2.1 Function. The Paging System provides paging service on MILA. It incorporates inputs from a central paging console, with selective access to various operational and administrative zones. The Paging System utilizes

selected channels of the Operating Intercom System for interconnection of the major MILA buildings.

2.2.2 Description. The Paging System provides paging capabilities and includes an audio system which provides speech reinforcement of speaker and audience activities and magnetic tape recording of these activities. The audio system will have playback capability for magnetic tape, motion picture sound track and other external sources of audio. It is designed such that all of these functions may be simultaneously "conferenced" with similar systems at remote locations, over leased commercial telephone lines.

The Paging System, including the Mission Briefing Room (MBR) Audio Systems, incorporates circuitry to allow automatic switching between dual power amplifiers in the event of failure of either amplifier. The remaining amplifier shall assume the full load at a reduced level.

Both of the systems are equipped with a seizure feature that will preempt normal system usage upon a signal from the MILA override circuit.

Paging System capabilities:

a. Provide paging capability from dispatcher console to any LC39 administrative and operational areas.

b. Provide control circuitry to allow seizure of all control points from a remote location, at the discretion of MILA override.

c. Provide paging capability from the selected test conductor location to override the dispatcher paging. The system will have the capability of pre-programming areas to receive emergency paging of a test conductor.

The Paging System is controlled from a dispatcher console. The operator will have available a small, modular desk-top panel, with back-lighted indicators, to allow access of the control position to any MILA zones. The system design provides for initial connection of this panel to twenty-two (22) zones, plus an "all call" position. Seven (7) additional positions will be used in the future for building modifications, zone changes, special requirements, etc. The desk-top panel will also contain a visual indicator to show priority seizure by the MILA override system and the test conductor.

The power amplifier racks for indivual zones are located in the telephone equipment rooms within these zones. This arrangement simplifies distribution to the various loudspeaker locations, as well as isolating system elements in the case of component failure causing failure alarm. Interconnection of the control points to their associated power amplifier racks shall be made at a zero decibel level (reference one milliwatt across 600 ohms) through the existing inside telephone plant.

2.3 OPERATIONAL TELEVISION

2.3.1 Function. The operational television system provides for the visual monitoring of hazardous or inaccessible operations during Launch Complex 39 vehicle assembly, checkout and launch.

2.3.2 Description. The operational television system (Figure 2.0-1) consists of cameras, camera control units, video programming/switches boards and monitors. The system is controlled from the Communications Room in the LCC. All switching and patching is performed in this room. The Fire Control rooms send the switching control signals to the Comm. Room. In the Fire Control rooms, a total of 60 monitor displays can be viewed at one time. Monitor displays of the pad area are available in the CCC. Display signals can originate

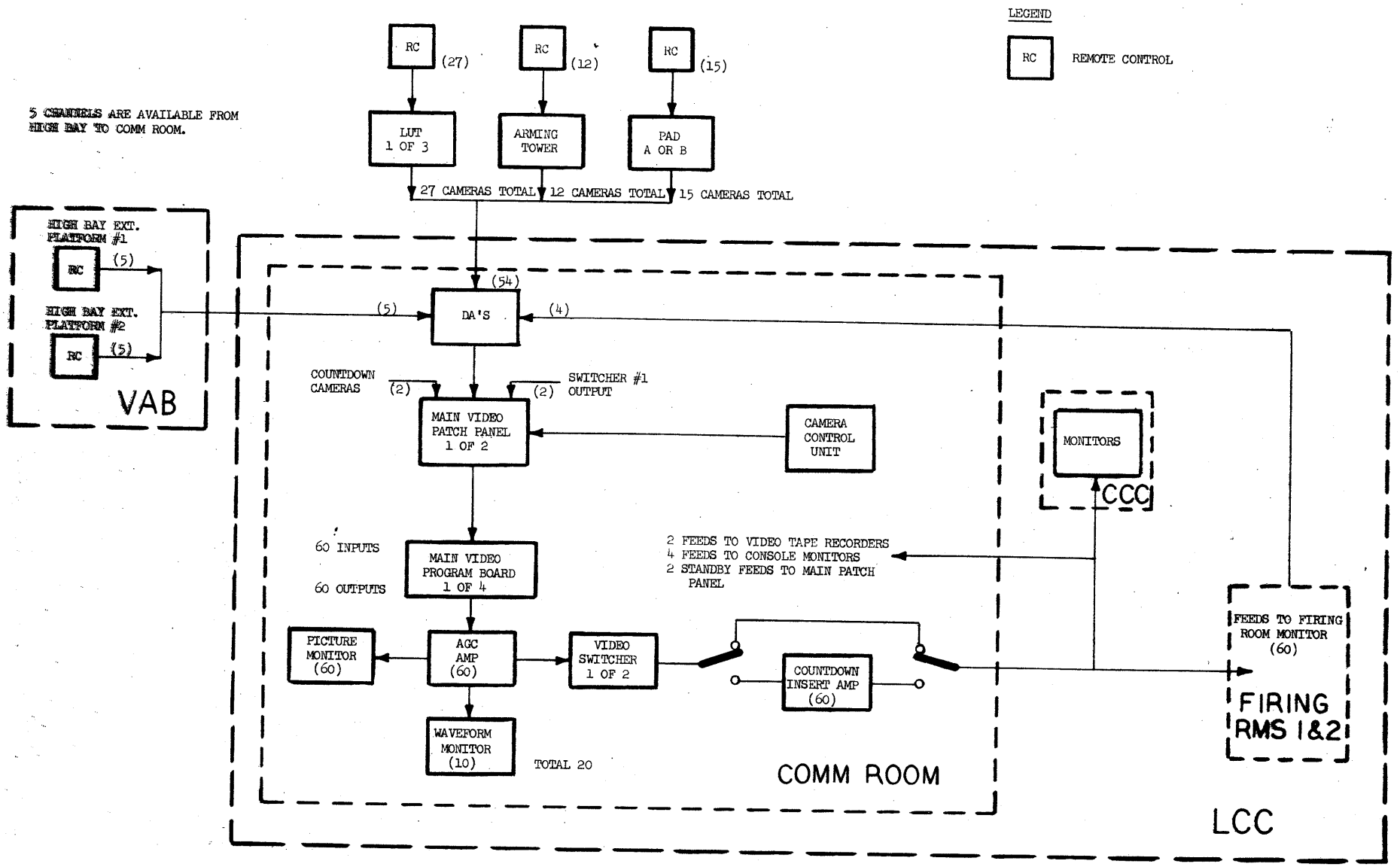

BLOCK DIAGRAM OPERATIONAL TV DISTRIBUTION

Figure 2.0-1

at the VAB High Bay Ext. platform 1 or 2, the Mobile Launcher, the Mobile Servicing Structure (MSS) and at Pads A or B. The ML, MSS, and the pad cameras are remotely controlled from the camera control unit located in the camera room in the LCC. The ML has 27 cameras, the MSS has 12 cameras, the pads have 15 cameras and the VAB high bay has 5 camera locations each on platforms #1 and #2. There are five channels available from the VAB High Bay to the communications room.

2.4 WATER SYSTEM

2.4.1 Function. The LC39 Water System supplies water to Launch Complex 39 for fire protection, domestic use, equipment cooling, and launch quench and fogging.

2.4.2 Description. The LC39 Water System consists of (a) VAB Area Fire and Potable Water System and (b) Pad Industrial and Firex Water System.

2.4.2.1 VAB Area Fire and Potable Water System

2.4.2.1.1 General. The VAB Area Fire and Potable Water System (Figure 2.0-2) furnishes water to the Utility Annex, VAB, ML Erection Area, Barge Terminal, Converter Compressor Facility, High Pressure Gas Battery, Paint and Oil Storage, Mobile Servicing Structure Park Area, Instrumentation Facility, and LC39 area fire hydrants.

2.4.2.1.2 Supply. The source of the VAB Water System is a 24-inch main, located along Kennedy Parkway. This main is fed by the City of Cocoa, Florida water system. It passes through the Merritt Island Industrial Area and serves the Industrial Area. There is a 16-inch two-way line located along NASA Causeway, East, that connects with the CKAFS water system.

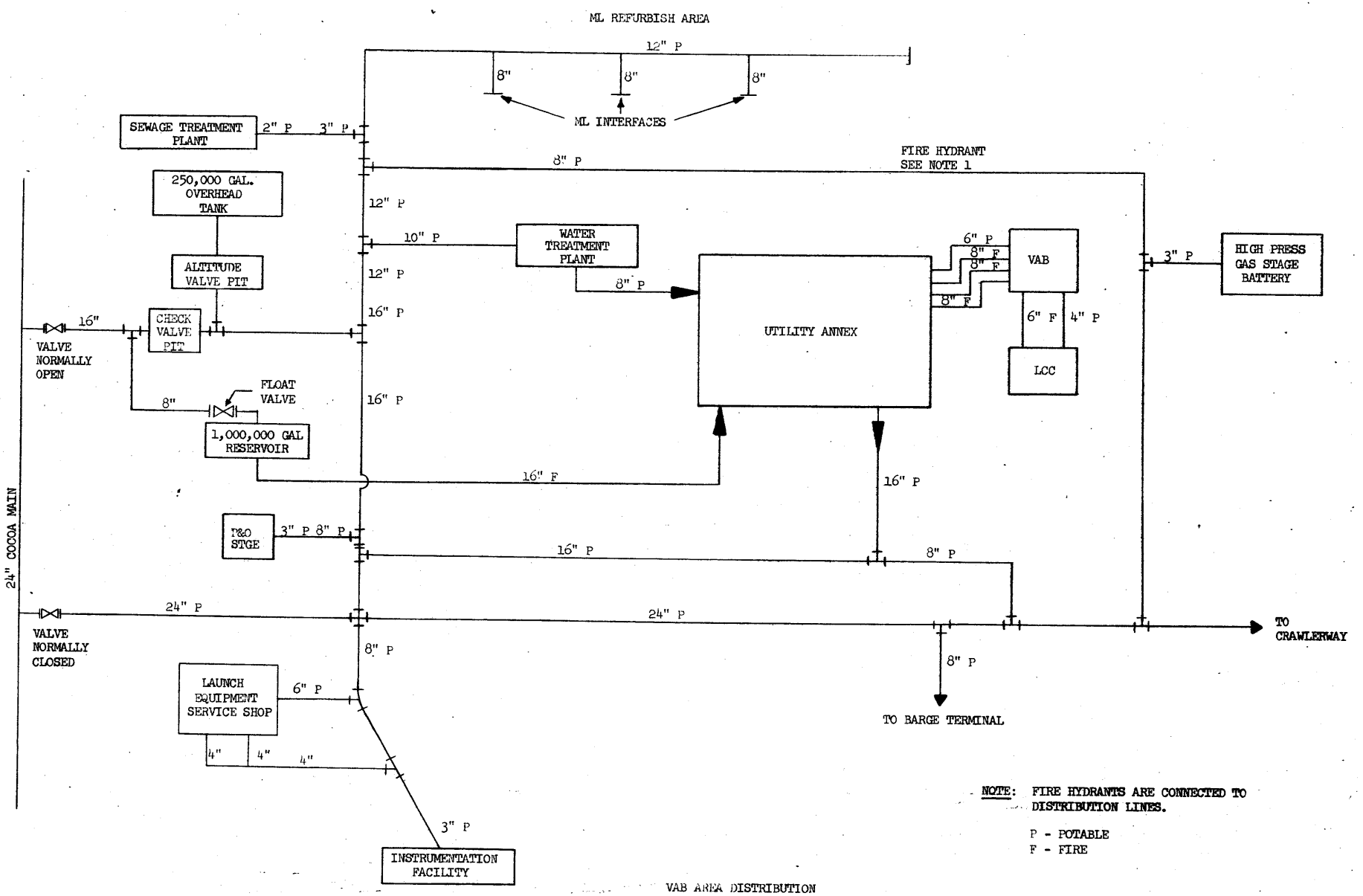

VAB AREA DISTRIBUTION
LC-39 WATER SYSTEM

Figure 2.0-2

The 24-inch main is capable of supplying the VAB Water System with 1,500,000 gallons of water per day at a pressure of 64 psi. There are two connections from the 24-inch main to the VAB area. One is a 16-inch main which is normally open and serves as the normal supply. The other connection is a 24-inch line which is normally closed. The 24-inch line is opened only in the event that water is to be supplied from the VAB area storage to MIIA.

2.4.2.1.3 Storage. There are two water storage facilities located in the VAB Area. One is an overhead tank with a capacity of 250,000 gallons. This tank is fed through a check valve and an altitude valve from the 16-inch main. The water level in the tank is maintained by the supply-main pressure. This tank supplies water to the potable booster pumps located in the Utility Annex, and to the distribution lines serving the VAB Area, CCF, MSS Park Area, and LC39 Pad Area.

The second storage facility consists of a ground reservoir with a capacity of 1,000,000 gallons. This reservoir is fed from the 16-inch main through an 8-inch connection. The level is automatically controlled by a level indicator. This reservoir supplies water to the fire booster pumps located in the Utility Annex.

2.4.2.1.4 VAB Area Loop. The overhead storage tank feeds the VAB Area Loop. This loop completely encircles the VAB. It consists of a 16-inch section, 12-inch section, 8-inch section and a 24-inch section. The 24-inch section is the main along the crawlerway.

2.4.2.1.5 Water Treatment Plant. The Water Treatment Plant consists of the water softening equipment. The equipment is fed from the VAB Area Loop through a 10-inch line. After treatment the water is routed to the Utility Annex through an 8-inch pipe.

The water from the Water Treatment Plant serves the local building use and the domestic pumps.

2.4.2.1.6 Utility Annex. The Utility Annex (Figure 2.0-3) houses the following portions of the VAB Water System: (a) potable booster pumps, (b) fire booster pumps, (c) chlorination equipment and, (d) necessary piping, valves and controls.

One line serves the domestic, boiler feed, and cooling water requirements of the Utility Annex. Another line furnishes water to the suction side of the three potable water booster pumps. These pumps are electrically driven and each pump has a capacity of 325 gpm at 265 psig. The 6-inch outlet from these pumps serves the potable water storage tank and the fire water reserve tank on the 40th level of the VAB. These pumps are automatically controlled from the two tanks on the 40th level.

Water from the 1,000,000 gallon ground reservoir feeds the suction side of the three fire water booster pumps in the Utility Annex. The three pumps are diesel engine driven, started by compressed air.

Two of the fire booster pumps have a capacity of 1,500 gpm at 285 psig. The outlet from these pumps furnishes fire water to the hose stations on the roof of the VAB the high and low zones in the VAB, the LCC and the Utility Annex. By means of manual valving, water from these pumps may be used to furnish water to the fire reserve tank on the 40th level of the VAB. These pumps are controlled by float valves in the 40th level VAB fire reserve tank. There is also a manual start switch located on the roof of the VAB. The pumps are manually stopped at the engine control panels or by the pump automatic safety devices.

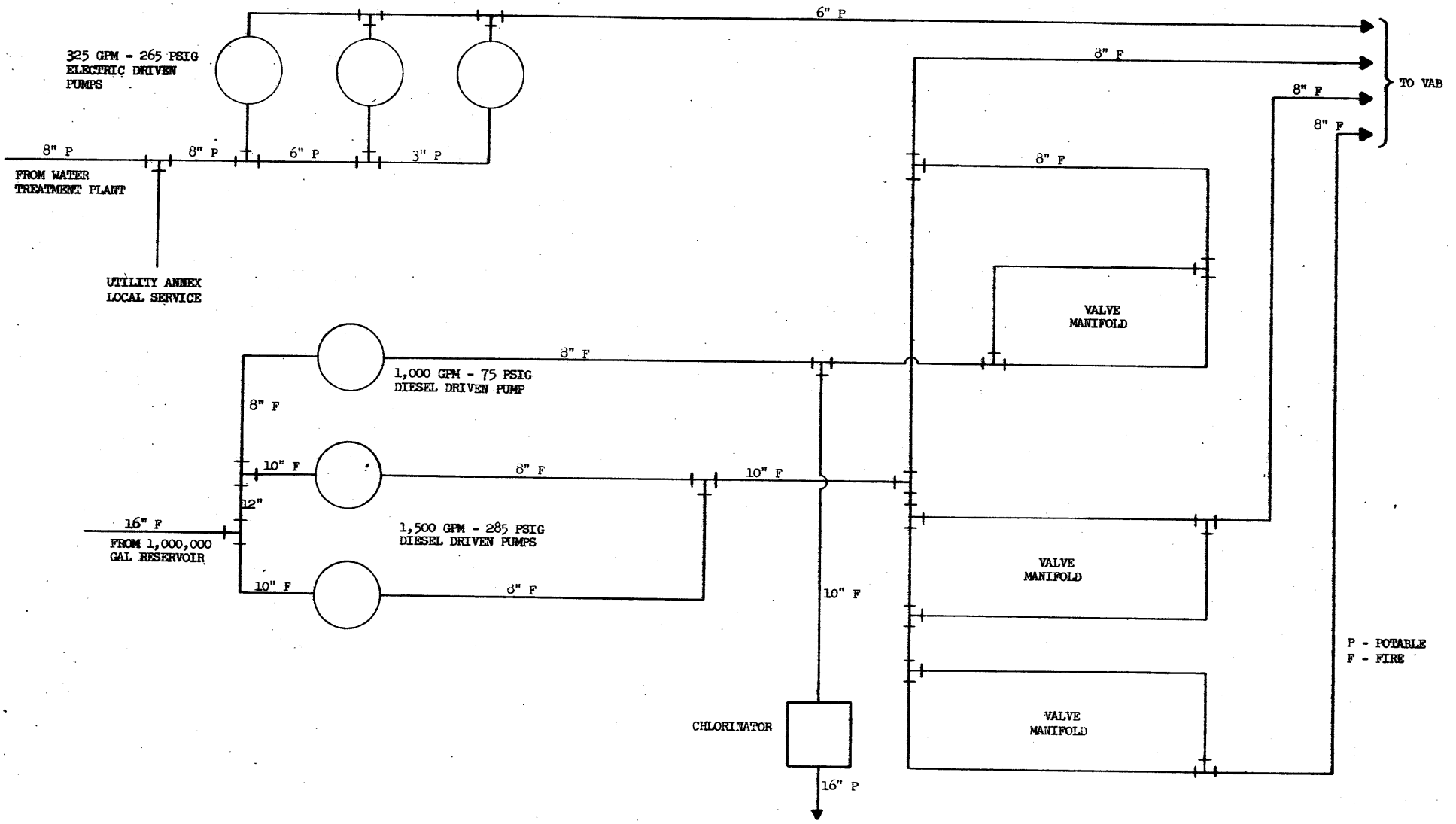

UTILITY ANNEX
LC-39 WATER SYSTEM

FIGURE 2.0-3

The third fire booster pump has a capacity of 1,000 gpm at 75 psig. All water furnished by this pump is chlorinated. This pump provides water to the VAB Area Loop. By valving this pump may furnish water to the outlet side of the 1500 gpm booster pumps. By a second valving arrangement, this pump may furnish water, through a 24-inch main, back to the 24-inch main along Kennedy Parkway. This arrangement is used only in the event of an emergency in the Industrial Area. The Utility Annex is protected by sprinklers and hose stations.

2.4.2.1.7 VAB. There is a potable water system and a fire water system located in the VAB (Figure 2.0-4). The potable water system consists of two 10,000 gallon storage tanks, and the necessary piping to furnish water to restrooms, laboratories, drinking fountains, and water cooled equipment.

One 10,000 gallon storage tank is located on the 40th level and one is located on the 25th level of the VAB. The two tanks are interconnected. Water is supplied to the 40th level tank from the potable water booster pumps located in the Utility Annex. A 3-inch connection is located in each High Bay to provide water to the ML.

The Fire Water System consists of the two 20,000 gallon fire reserve tanks, a high zone system, low zone system and roof hose stations.

One 20,000 gallon tank is located on the 40th level and the other is located on the 25th level. The 40th level tank is maintained at operating level by the potable water booster pumps located in the Utility Annex. This tank may be filled by the 1,500 gpm fire booster pumps. This may be accomplished by manually operating a system of valves. The 40th level tank maintains pressure on the high zone and the 25th level tank. The 25th level tank maintains pressure on the low zone.

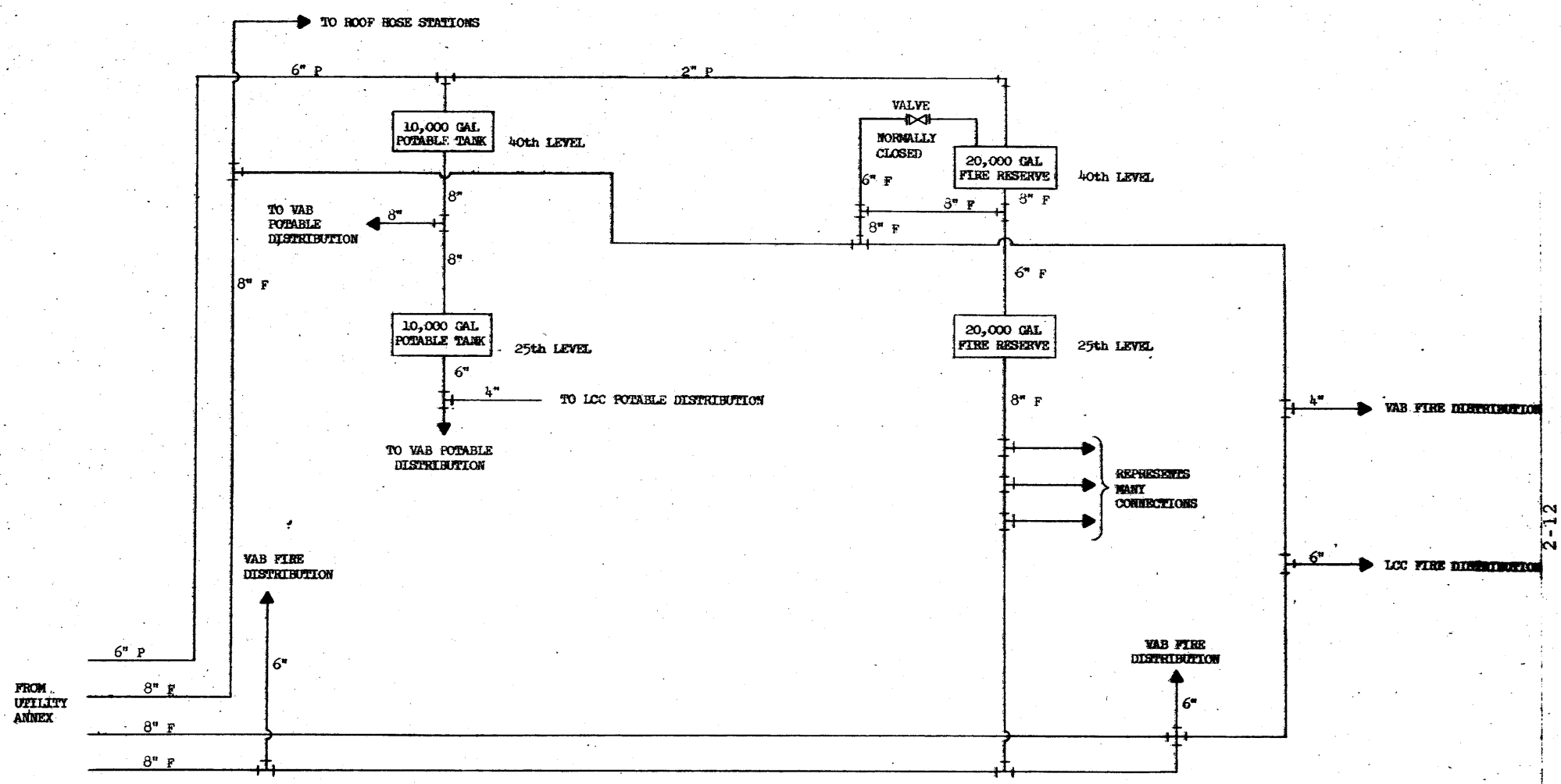

VAB DISTRIBUTION
LC-39 WATER SYSTEM
FIGURE 2.0-4

P - POTABLE
F - FIRE

In the event of a water flow in the high or low zone, water is supplied from the potable pumps. If these pumps cannot maintain the level in the tank, the 1,500 gpm fire pumps are started consecutively by level sensors in the tank. The 1,500 gpm pumps furnish water directly to the high and low zones.

The high and low zones consist of sprinklers and hose stations. The low zone furnishes water to the LCC.

The VAB roof hose stations are supplied water from the 1,500 gpm fire pumps. A manual start switch is located on the roof.

A 6-inch connection is provided in each High Bay to provide fire water to the ML.

2.4.2.1.8 LCC. The LCC has a potable water system and a fire water system. The LCC potable water system is supplied from the VAB 10,000 gallon domestic storage tanks through a 4" line from VAB Tower "D".

2.4.2.1.9 Mobile Launcher Erection Area. Water to the ML Erection Area is furnished through a 12-inch main from the VAB Area Loop. This main supplies water to the area hydrants and to the ML interfaces through 8-inch connections. The water system on the ML is described in Paragraph 2.4.2.1.21.

2.4.2.1.10 Paint and Oil Storage. The P&O Storage is furnished water for fire protection only. There are two fire systems in the building. One system furnishes foam and the other consists of sprinklers. Both systems are automatic.

2.4.2.1.11 Sewage Treatment Plant. Water is furnished to the plant for domestic and process use through a 3" connection from the area loop.

2.4.2.1.12 High Pressure Gas Battery. The VAB High Pressure Gas Storage Battery is served by a 3-inch connection to the 8-inch potable loop. It is used for wash down and supplies a fire hose rack.

2.4.2.1.13 Instrumentation Facility. This facility is served by an 8-inch connection to the 24-inch main. The 8-inch connection serves fire hydrants in the area and a 3-inch connection serves the building for domestic purposes and serves a fire hose rack.

2.4.2.1.14 Launch Equipment Service Shop. This shop is served by a 6-inch connection to the 8-inch main serving the Instrumentation Facility. This connection serves fire hydrants in the area and a 4-inch connection to this line serves the domestic users. A 4-inch connection to the 8-inch main serves the paint shop sprinklers and the building fire hose racks.

2.4.2.1.15 Barge Terminal. This facility is served by an 8-inch connection to the 24-inch crawlerway main. This connection serves fire hydrants and a hose connection.

2.4.2.1.16 Mobile Servicing Structure Park. An 18-inch line is routed into the MSS Park Area (Figure 2.0-5). This line is connected at both ends to the Crawlerway main. An 8-inch connection is made to the 18-inch line and is further reduced to a 3-inch line. This line serves the interface furnishing potable water to the MSS for domestic purposes. The pressure in the line at this point will not furnish water above the deck level.

2.4.2.1.17 Converter Compressor Facility. Water is furnished to the CCF (Figure 2.0-5) for domestic purposes only, through a 2½-inch connection from the crawlerway main.

2.4.2.1.18 Pad Pumping Station Potable System. Potable water is furnished to the Pad Pumping Station (Figures 2.0-5 and 2.0-6)

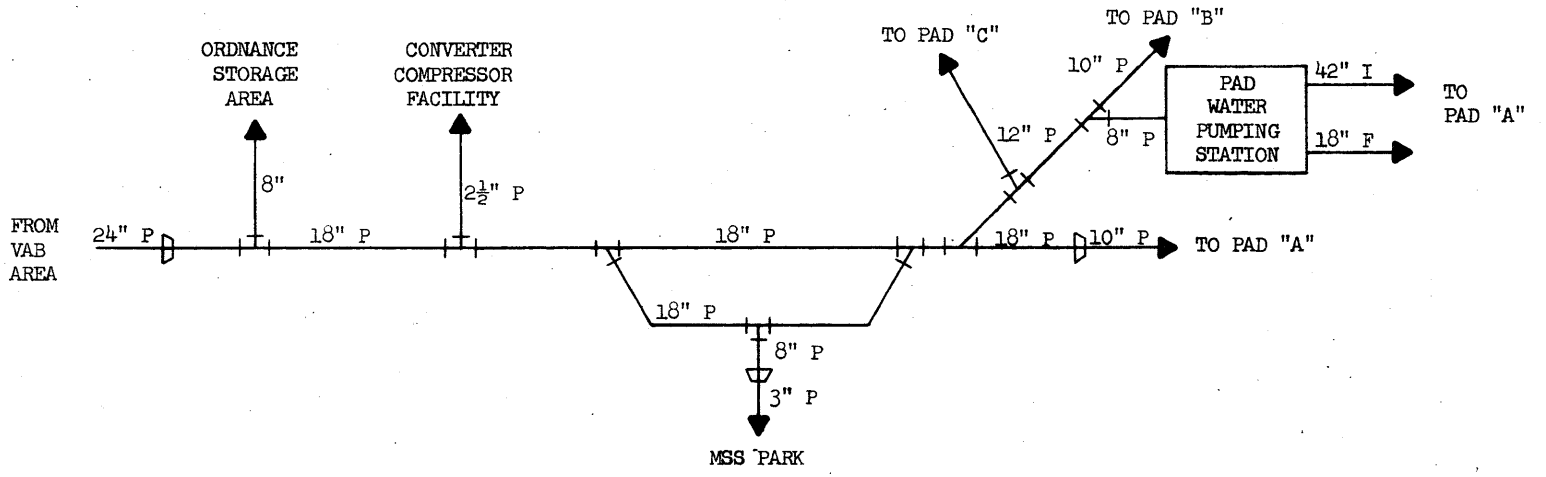

CRAWLERWAY DISTRIBUTION
LC-39 WATER SYSTEM

FIGURE 2.0-5

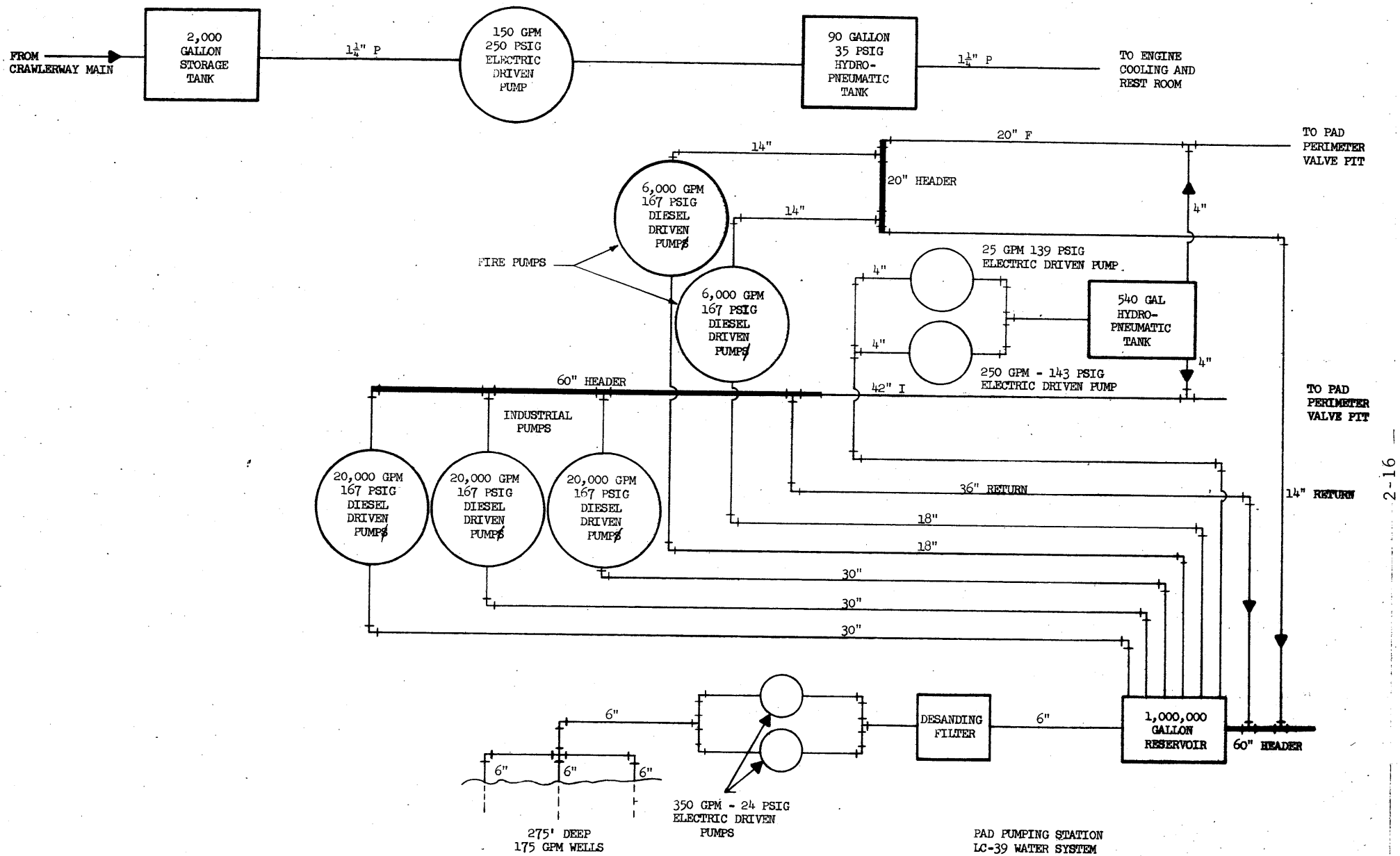

PAD PUMPING STATION
LC-39 WATER SYSTEM
FIGURE 2.0-6

through an 18-inch connection to the crawlerway main. This water is used for domestic purposes and for engine cooling.

The water passes through a 2,000 gallon storage tank, which furnishes suction to a 150 gpm. The pump outlet furnishes water to a 90 gallon hydro-pneumatic storage tank. This tank then furnishes water to the lavatory facilities and to the engine cooling system.

2.4.2.1.19 Ordnance Storage Area. This area (Figure 2.0-5) is served through an 8-inch connection to the 18-inch crawlerway main. The 8-inch line serves a fire hydrant near the receiving building. A 2-inch connection to the 8-inch line serves the Receiving Building for domestic purposes.

2.4.2.1.20 Launch Pad Area. The potable water enters the pad area (Figure 2.0-7) through a 10-inch main from the 18-inch crawlerway main. The potable water system furnishes domestic or fire water to the following: (a) ML (2.4.2.1.21) (b) MSS (2.4.2.1.22) (c) RP-1 Storage restroom through a 4-inch connection to the 10-inch main (d) LH_2 storage restrooms through a 4-inch connection to the RP-1 line (e) LOX storage restroom and pump cooling through a 4-inch connection to the 10-inch main (f) compressed air cooling tower through a 4-inch connection to the RP-1 line (g) PTCR restroom and fire hoses through a 4-inch connection to the 10-inch main (h) ECS building restroom through a 2½-inch connection to the PTCR Building (i) ECS cooling tower through a 2-inch connection to the 4-inch line serving the LOX facility.

2.4.2.1.21 Mobile Launcher Potable Water. This water is supplied from the 10-inch line, in the Launch Pad valve and tank area, through a 3-inch connection. The water passes through a 150 gpm - 250 psig pump and

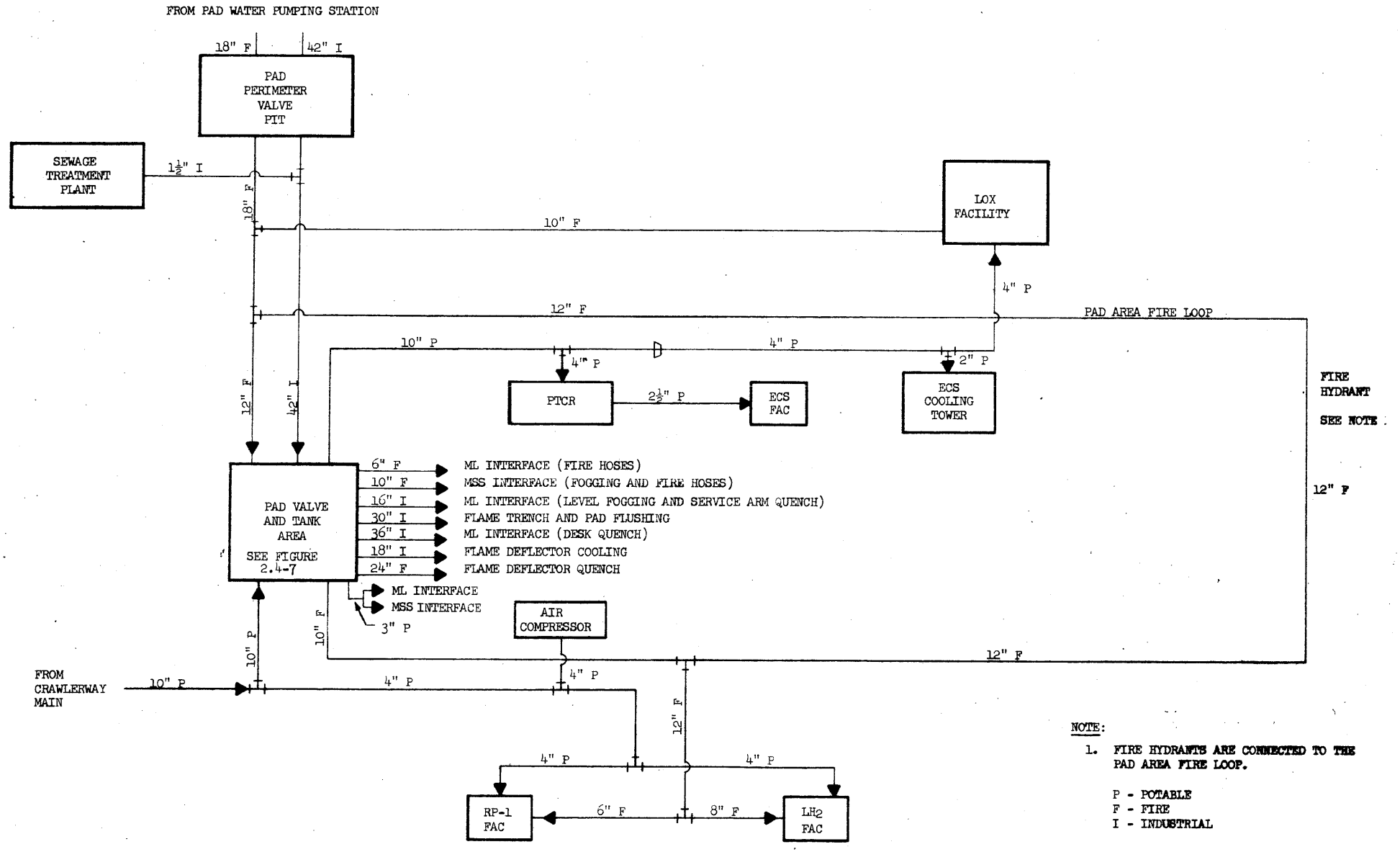

NOTE:

1. FIRE HYDRANTS ARE CONNECTED TO THE PAD AREA FIRE LOOP.

P - POTABLE
F - FIRE
I - INDUSTRIAL

PAD AREA DISTRIBUTION
LC-39 WATER SYSTEM
FIGURE 2.0-7

then into a 4,500 gallon 236 psig hydropneumatic tank. The tank is pressurized with gaseous nitrogen. A 3-inch line connects to the ML at the ML interface.

Potable water is used for toilets on level "A", electric water coolers on levels "A" and "B", and for drinking fountains, emergency eye washes and emergency showers on levels 30 through 220.

2.4.2.1.22 Mobile Servicing Structure Potable Water. The MSS is served potable water through a 3-in. connection to the ML 3-in. line from the valve and tank pit (Figure 2.0-8) and through a 3-inch connection at the MSS Park (2.4.2.1.16). Potable water serves a restroom on the base platform and emergency eye washes, emergency safety showers and drinking fountains serving platforms 3, 4, and 4a.

2.4.2.2 Pad Industrial and Firex Water System

2.4.2.2.1 General. This system furnishes water to the launch pad for fire protection, cooling and quenching. The system is made up of (a) Pad Pumping Station, (b) Industrial Water System, and (c) Firex System.

2.4.2.2.2 Pad Pumping Station. The source of water is three 6-inch wells, each 275 feet deep with a free flow of 175 gpm. The wells feed into a common header. The header supplies the inlets of two electric driven pumps with a capacity of 350 gpm at 24 psig. The outlets from these well booster pumps feed a 1,000,000 gallon reservoir. The pumps are automatically controlled from level sensors in the reservoir. The water from the well booster pumps passes through a 350 gpm desanding filter. (Figure 2.0-6)

There are three diesel engine driven industrial water pumps, two diesel engine driven fire water pumps and two electric driven jockey pumps in the station.

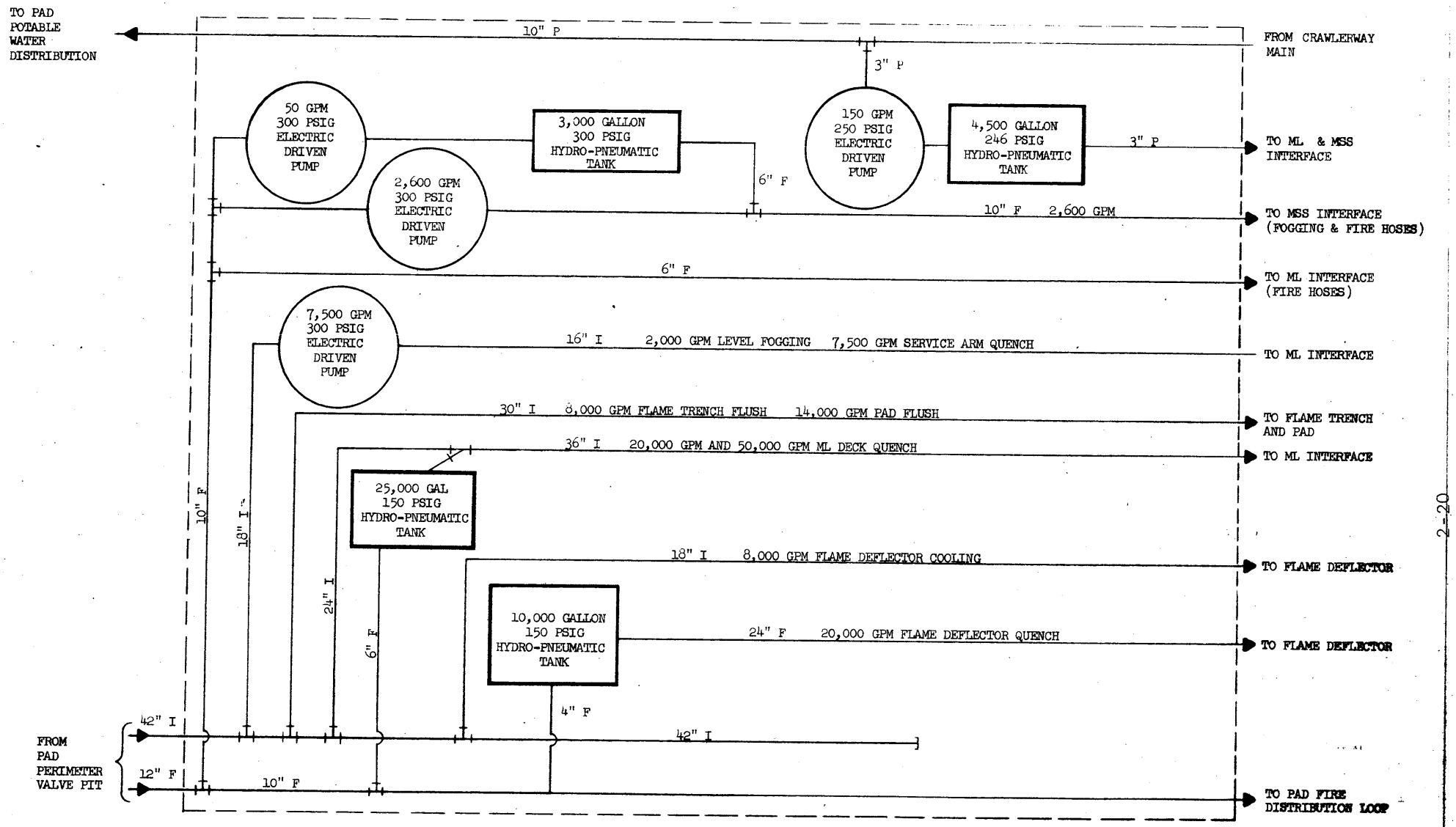

PAD VALVE AND TANK AREA
LC-39 WATER SYSTEM

FIGURE 2.0-8

F - FIRE
I - INDUSTRIAL
P - POTABLE

The industrial pumps are each directly connected to the ground reservoir by a 30-inch main. The industrial pumps have a capacity of 20,000 gpm, each with a discharge pressure of 167 psi. They feed into a 6-inch header.

The fire pumps are each directly connected to the ground reservoir by an 18-inch main. The fire pumps have a capacity of 6,000 gpm with a discharge pressure of 167 psi. They feed into a 20-inch header.

A 36-inch line connects the 60-inch industrial header to the ground reservoir and a 14-inch line connects the 20-inch fire header to the ground reservoir for return.

There is a 25 gpm - 139 psi jockey pump and a 250 gpm - 143 psi jockey pump. These pumps feed a 540 gallon hydro-pneumatic tank. This tank feeds both the industrial system and the fire system and maintains normal operating pressure in the systems.

The industrial pumps have manual, compressed air start and stop control. The fire pumps have automatic compressed air start and manual stop control.

The 60-inch industrial header feeds a 42-inch line and the 20-inch fire header feeds a 20-inch line. The 20-inch fire line reduces to an 18-inch line. Both lines are routed through the perimeter valve pit at the pad area. The valves in this pit are controlled from switches in the PTCR. Potable water supply in the pumping station is described in Paragraph 2.4.2.1.18.

2.4.2.2.3 Industrial Water System

2.4.2.2.3.1 General. The industrial water system is supplied water from the pad pumping station through a 42-inch

main routed through the pad perimeter valve pit to the pad valve and tank pit. The 42-inch main acts as a header which supplies water to the subsystems.

2.4.2.2.3.2 Flame Trench and Pad Flushing. This subsystem furnishes water to flush the flame trench and pad in the event of a propellant spill. The subsystem is supplied water through a 30-inch line from the header. The main furnishes water to the flame trench flushing nozzles at a rate of 8,000 gpm, and to the pad flushing nozzles at a rate of 14,000 gpm. The main has a capacity of 22,000 gpm. The flow is controlled from the PTCR or from the LCC.

2.4.2.2.3.3 Flame Deflector Cooling and Quench. The cooling subsystem is furnished water through an 18-inch line from the header. This line has a capacity of 8,000 gpm. The flow is controlled automatically from the terminal countdown sequencer. It starts flowing at T-10 seconds and stops at T+5 minutes.

The quench subsystem is supplied water from a 10,000 gallon storage tank in the valve pit through the 18-inch cooling line. The tank is filled through a 4-inch line from the 10-inch fire main in the pit. The tank is pressurized to 150 psig by gaseous nitrogen.

The tank discharges water through a 24-inch line to the flame deflector quench nozzles at a rate of 20,000 gpm. The flow is controlled automatically by the terminal countdown sequencer. Flow starts at T+2 seconds and terminates approximately 30 seconds later.

2.4.2.2.3.4 Mobile Launcher Deck Cooling and Quench. This subsystem is furnished water through a 36-inch line from the header through the ML interface. In addition water is furnished from a 25,000

gallon tank. The discharge from this tank is connected to the 36-inch supply line. Check valves control back flow into the header or the tank. The tank is pressurized to 150 psig by gaseous nitrogen and is supplied water from the 10-inch fire line through a 6-inch line.

The flow to the deck nozzles is controlled by one valve operated by the terminal countdown sequencer. The valve opens at T+2 seconds and closes at T+5 minutes. A flow of 50,000 gpm discharges the tank in approximately 30 seconds. At this time, a flow of 20,000 gpm is supplied from the 42-inch header.

A quick disconnect coupling connects the 26-inch main to the Mobile Launcher at the ML/pad interface. The water is piped to 44 quench nozzles or perforated pipes.

2.4.2.2.3.5 Mobile Launcher Level Fogging and Service Arm Quench. This subsystem is furnished water through a 16-inch line from the header. The water passes through an electric driven pump with a capacity of 7,500 gpm at 300 psig. The line is connected to the ML by a quick disconnect coupling at the ML/pad interface.

Level fogging is provided at levels 30', 120', 160' and 200'. This consists of fogging nozzles located at each of the four corners of the tower. The water is supplied from the service arm quench riser. This flow is controlled by remote switches at the CCC (LCC).

The service arms quench system is supplied by a line from the ML interface to level 320. At the interface, the line is 16 inches in diameter. It reduces to 14-inch at level 120, 12-inch at level 200, and 10-inch at level 280. Six-inch connections are provided at levels 30, 60, 80, 100, 120, 140, 160, 180,

200, 220, 240, 260, 280, 300 and 320. Spray heads are located on the tower above and below the arm. The arm is protected in the retracted position.

This flow is automatically controlled by the terminal countdown sequencer. Flow starts at T+2 seconds and stops at T+5 minutes.

2.4.2.2.3.6 Sewage Treatment Plant. Water is furnished to the plant through a 1½-inch connection from the 42-inch industrial main.

2.4.2.2.4 Firex Water System

2.4.2.2.4.1 General. The fire water loop is furnished water through an 18-inch line from the pad water pumping station, routed through the pad perimeter valve pit. This line is reduced to a 12-inch main at the connection of the loop return. The 12-inch line passes through the pad valve and tank pit where it is further reduced to a 10-inch main. After leaving the valve and tank pit, it is further reduced to an 8-inch line. However, before completing the loop, the line is increased to 12 inches.

2.4.2.2.4.2 LOX Facility. The LOX facility is furnished water through a 10-inch connection to the 18-inch fire main. The fire protection consists of spray heads covering the tank and the fill ports. There are temperature sensors to show heat rise. The flow is controlled manually by remote switches located in the CCC (LCC).

2.4.2.2.4.3 LH_2 Facility. The water for this facility is furnished through a 12-inch connection to the 12-inch fire loop. This connection serves the fire hydrants in the LH_2 area and the RP-1 Area. An 8-inch connection to the 12-inch line furnishes water to the storage tank and fill port spray heads. Temperature sensors show heat rise. The system is manually controlled by remote switches located in the CCC (LCC).

2.4.2.2.4.4 RP-1 Facility. A 6-inch connection to the 12-inch line serving the LH_2 Facility serves the RP-1 fill port spray heads. A 4-inch connection furnishes water to the foam system. The RP-1 pump and the storage tank is covered by foam spray heads.

2.4.2.2.4.5 Pad Fire Hydrants. All fire hydrants in the pad area are served by the pad fire loop.

2.4.2.2.4.6 Mobile Launcher Fire Water. A 6-inch connection to the 10-inch fire line serves the ML fire hoses through the ML interface. The fire water is supplied to the ML through interfaces at the ML Erection Area (2.4.2.1.9), VAB (2.4.2.1.7) and the Launch Pad. Fire hoses are located on level "0".

2.4.2.2.4.7 Mobile Servicing Structure. In the pad valve and tank pit, the 12-inch fire line is reduced to a 10-inch line. A 10-inch connection to the 12-inch fire line serves a 2600 gpm - 300 psig pump. This pump serves the MSS fire system through a 10-inch line to the MSS interface. A 2½-inch connection serves a 50 gpm 300 psig pump which maintains water level in a 3,000 gallon hydropneumatic tank. This tank furnishes water during the interval needed for the booster pump to develop full pressure. The pressure in the tank is obtained by using gaseous nitrogen. An 8-inch line runs up the structure to a point above platform 4c.

The MSS fire system consists of fire hose racks located on deck level, levels 44, 133, 221 and platforms 3, 4a, and 4c; and fog nozzles located on platforms 3, 4a, and 4c. The fog nozzles are controlled by remote switches located in the CCC (LCC).

2.5 ELECTRICAL POWER SYSTEM

2.5.1 Function. The Electrical Power System supplies electrical power to the facilities and equipment located throughout Complex 39.

Reliability is enhanced by providing most areas with dual feeds. Provision is made to isolate critical instrumentation from surges connected with industrial type loads.

Centralized remote control and monitoring provides the capability to monitor and remotely control vital parts of the power system, especially in areas which must be left unmanned during the period just prior to launch. This control includes both normal and emergency power in the 69KV main substation, the VAB and vicinity, and Pad "A" and vicinity. Centralized remote control and monitoring is a function of the Complex Control Center (CCC).

Emergency power sources are provided for critical loads where loss of power would create hazards, cause severe inconvenience, or cause loss of life or equipment. These loads include critical lighting in hallways and stairways, clearance lights, elevators, fire alarm system, P.A. system, sump pumps, etc.

2.5.2 Description

2.5.2.1 General. Electric power for Complex 39 originates at the 69KV main substation located on the west side of Kennedy Parkway, opposite the Vehicle Assembly Building area.

Power is supplied to this substation by the Florida Power and Light Company 69KV incoming transmission line.

The main 69KV substation steps the voltage down to 13.8KV on both the industrial bus and the instrumentation bus. These buses are normally isolated

from one another, but can be connected in an emergency. The 13.8KV feeders originating in the main 69KV substation carry normal electrical power to the various Complex 39 areas. (See Figures 2.0-9 and 2.0-10)

2.5.2.2 VAB and Adjacent Buildings

2.5.2.2.1 Utility Annex. Three phase, 13.8KV power is supplied to three switchgear assemblies and a 4160V substation at the Utilities Annex. (See Figure 2.0-11)

The three switchgear assemblies each have a divided bus fed by a separate feeder. Should one feeder be lost, a switch is closed to connect the two bus sections together, feeding both sections from one feeder. There is no interconnection between the three switchgear assemblies. Two of the assemblies are connected to the industrial system and one is connected to the instrumentation system.

The switchgear assemblies are used to control the supply of 13.8KV power to substations throughout the VAB area. The connections are made so that a given substation receives power from two distinct sections of the switchgear. This provides greater reliability to the power distribution system.

A dual substation in the Utilities Annex supplies the power for loads in the Annex. This substation is fed 13.8KV power from the switchgear assemblies in the Annex. Each transformer feeds one bus. These buses are connected together should one transformer be unable to supply power. Power is supplied at 480V to loads or to transformers should a reduced voltage be required.

The dual 4160V substation accepts power from two 13.8KV feeders and supplies three phase 4160V power to motor control centers which, in turn, supply power to large refrigeration system motors.

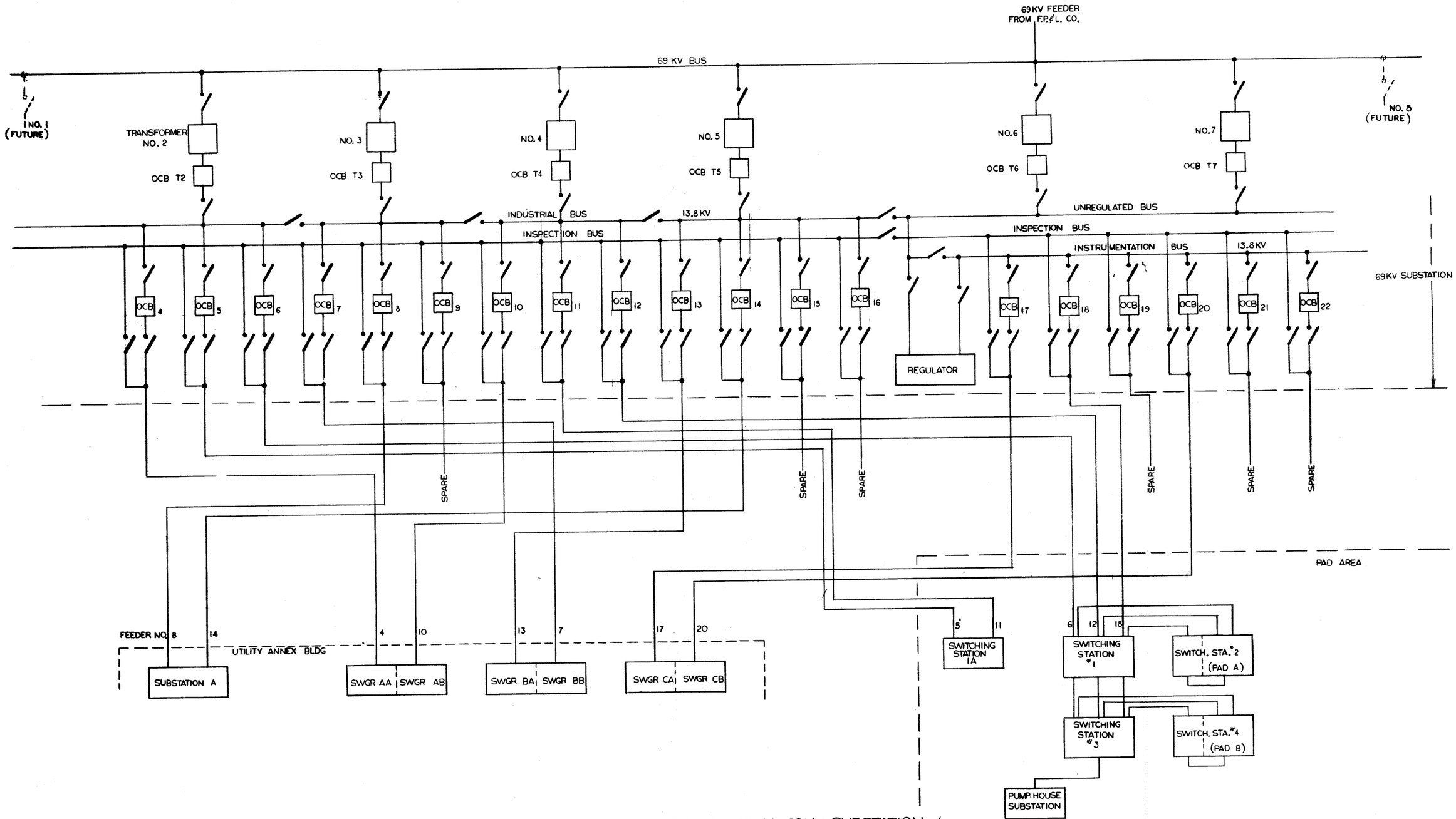

BLOCK DIAGRAM -69KV SUBSTATION &
13.8KV POWER DISTRIBUTION SYSTEM

Figure 2.0-9

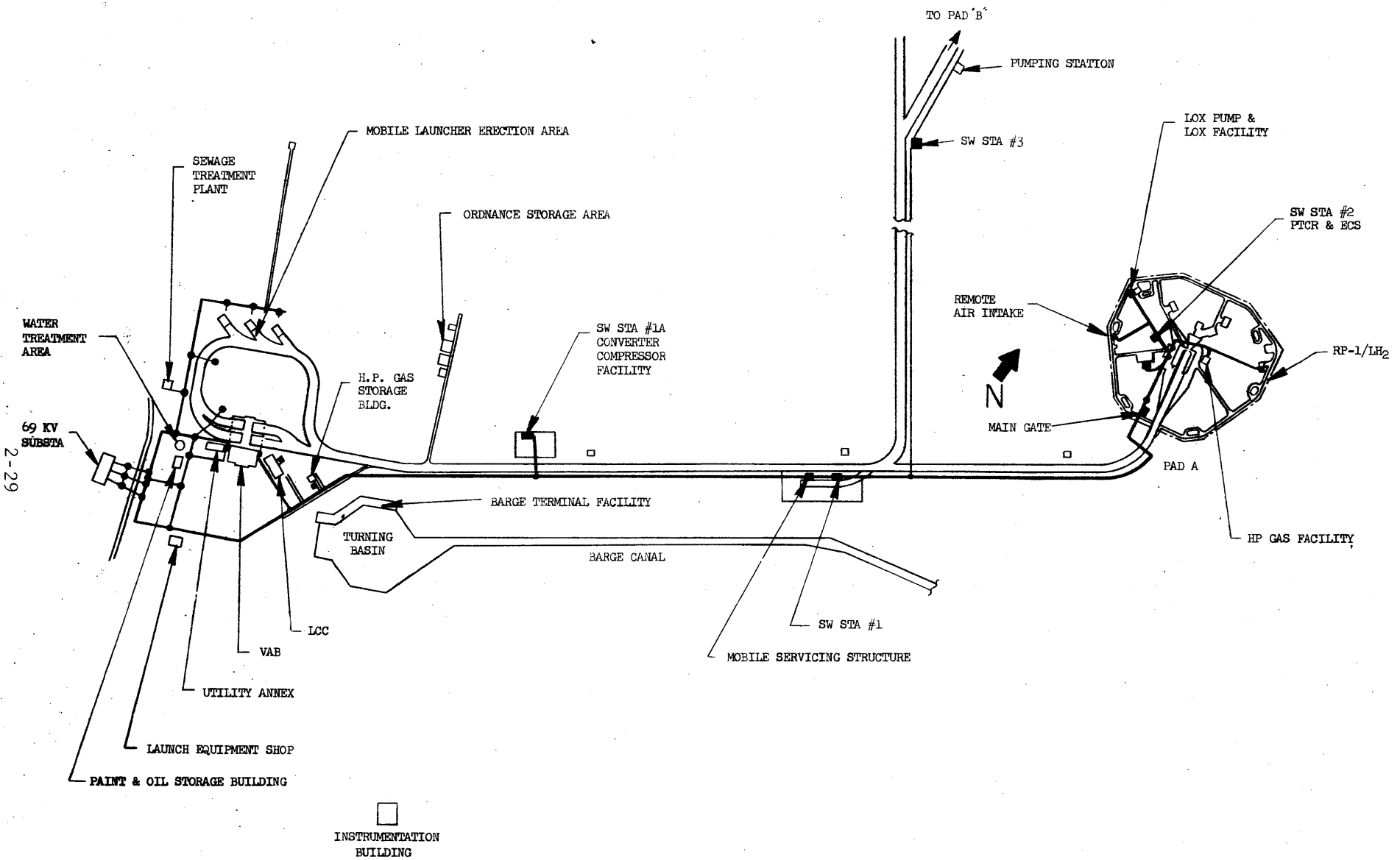

POWER DISTRIBUTION SYSTEM
COMPLEX 39

FIGURE 2.0-10

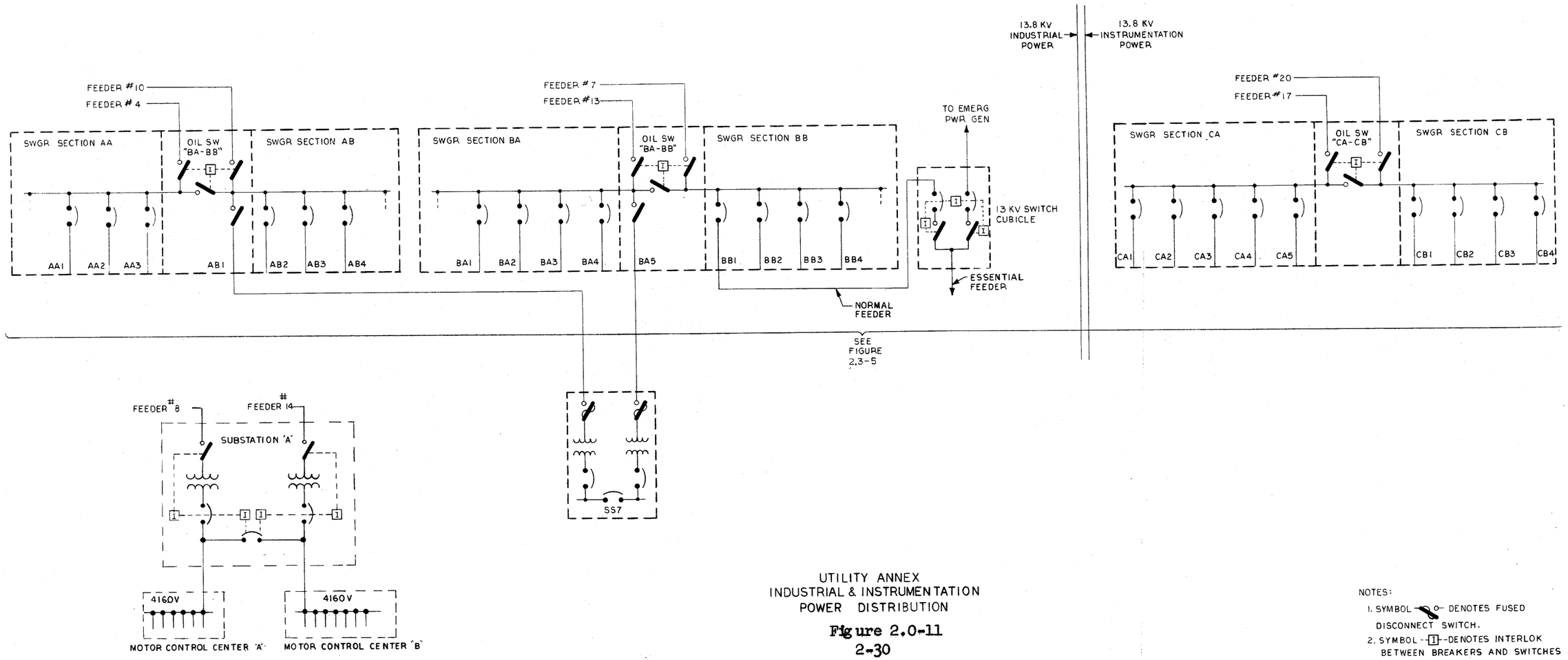

UTILITY ANNEX
INDUSTRIAL & INSTRUMENTATION
POWER DISTRIBUTION

Figure 2.0-11

NOTES:

1. SYMBOL —⊘— DENOTES FUSED DISCONNECT SWITCH.
2. SYMBOL --[I]--DENOTES INTERLOK BETWEEN BREAKERS AND SWITCHES

Emergency power for the VAB area is supplied by a diesel generator in the Utilities Annex. This generator starts automatically when normal power is lost.

An automatic throwover switch in the 13KV switch cubicle transfers the essential feeder to the emergency system generator. When normal power is restored, a sequence is initiated to return the essential feeder to the normal power system. (See Figure 2.0-12)

Emergency power in the Utility Annex is distributed by a substation which is fed by the essential feeder. Critical loads are fed at all times from this substation with exception of the elevator, which is automatically connected when normal power is lost.

2.5.2.2.2 Vehicle Assembly Building (VAB). Industrial power and instrumentation power at 13.8KV is supplied to oil switches in the VAB from the switchgear assemblies in the Utilities Annex. These oil switches supply power to substations located throughout the VAB. These oil switches also feed power to several other facilities in the VAB area. (See Figure 2.0-13)

Each substation has two feeds and two identical transformers. The two transformers feed separate buses that can be connected together should one transformer be unable to supply power. Power is supplied to loads at 480V.

Pedestals in the VAB provide instrumentation and industrial power at 13.8V for the Mobile Launchers while located in the VAB.

Emergency power for the VAB is supplied from the diesel generator in the Utility Annex by the essential feeder. The essential feeder supplies emergency power

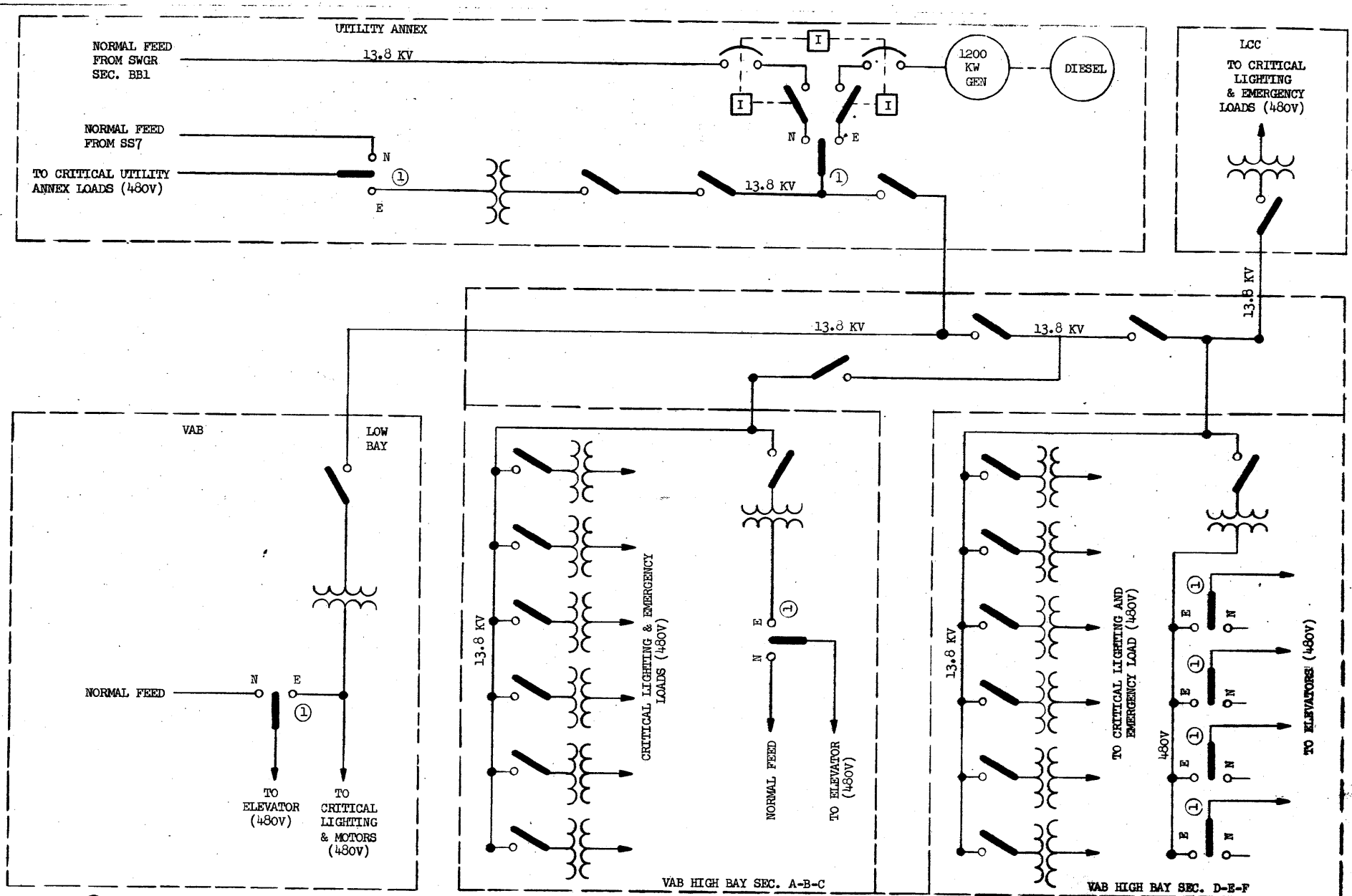

NOTE: 1 - AUTO TRANSFER SWITCH

SYMBOL - I - DENOTES INTERLOCK BETWEEN SWITCHES AND BREAKERS.

VAB VICINITY - EMERGENCY POWER DISTRIBUTION

FIGURE 2.0-12

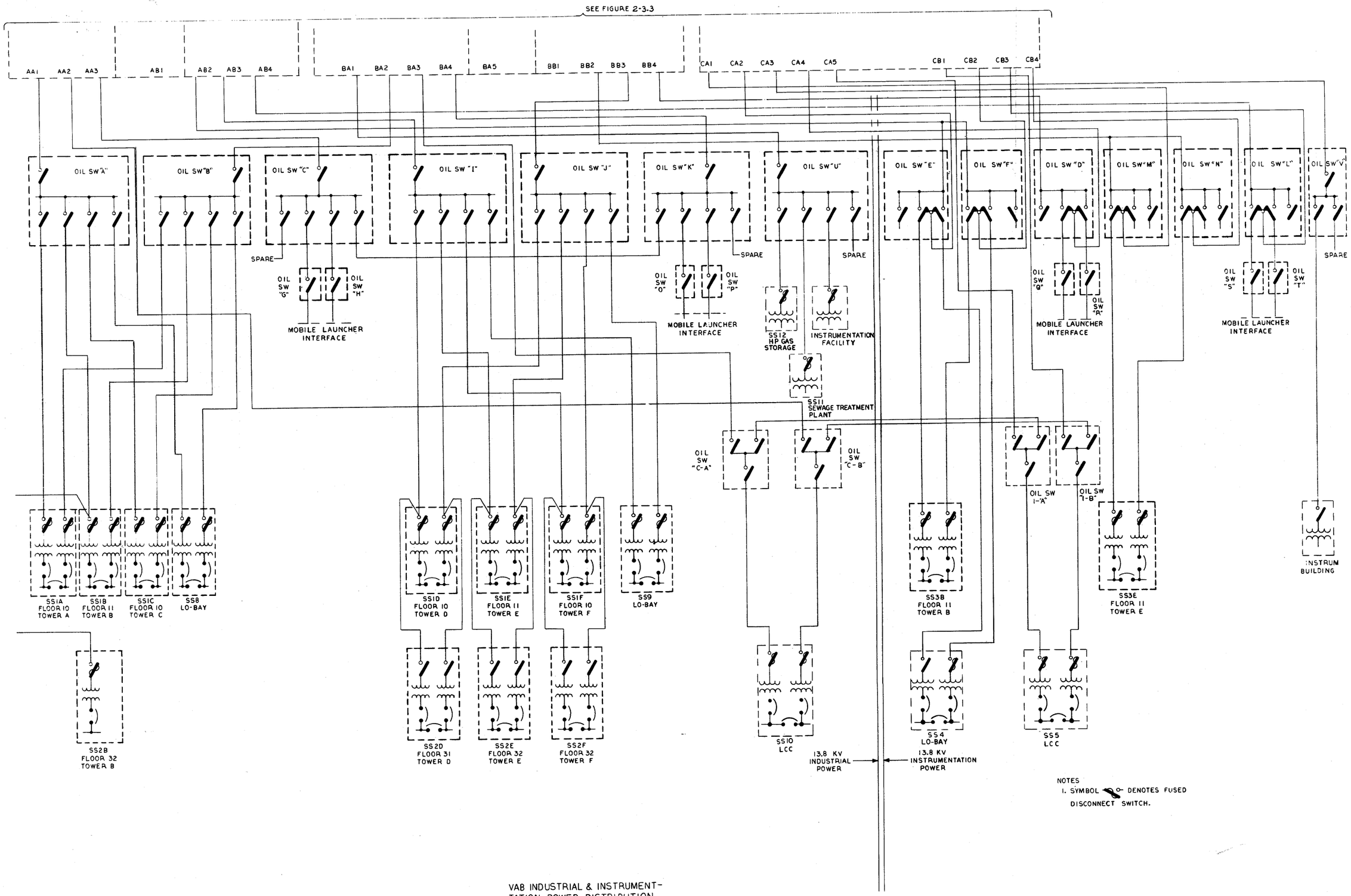

VAB INDUSTRIAL & INSTRUMENTATION POWER DISTRIBUTION

Figure 2.0-13

to substations throughout the VAB. These substations supply buses to which critical loads are connected at all times. Elevators are automatically connected to these buses when normal power is lost. (See Figure 2.0-12)

2.5.2.2.3 Launch Control Center (LCC). Power is supplied to the LCC industrial and instrumentation substations from oil switches located in the VAB. This 13.8KV, three phase power is supplied to two identical transformers in each LCC substation which, in turn, feed a divided 480V bus. These buses can be interconnected should one of the transformers be unable to deliver power. Should an instrumentation feeder be lost, the instrumentation substation is connected to one of the industrial feeders.

Emergency power is supplied from the diesel generator in the Utility Annex by the essential feeder which comes through the VAB. This feeder supplies a substation in the LCC which, in turn, feeds the critical loads. Critical loads include lighting in corridors and stairways, obstruction lights, sump pumps, and one elevator.

2.5.2.4 Facilities in the VAB Area.

2.5.2.4.1 Paint and Storage Area. The Paint and Storage Area is supplied 480V power from the Utility Annex. It is transformed down to 120/208V to meet area needs.

No emergency power is supplied to this area.

2.5.2.4.2 Water Treatment Area. The Water Treatment Area is supplied 480V power from the Utility Annex.

No emergency power is supplied to the Water Treatment Area.

2.5.2.4.3 Sewage Treatment Plant. Three phase industrial power at 13.8KV is supplied to the Sewage Treatment Plant from

oil switches in the VAB. A substation in the Sewage Treatment Plant supplies power to the loads at 480V.

No emergency power is supplied to the Sewage Treatment Plant.

2.5.2.4.4 High Pressure Gas Storage Area. Three phase industrial power at 13.8KV is supplied to the High Pressure Gas Storage Area from oil switches in the VAB. A substation in the High Pressure Gas Storage Area supplies power to the loads at 480V.

No emergency power is supplied to the High Pressure Gas Storage Area.

2.5.2.4.5 Ordnance Storage Area. Power is supplied at 480V to the Ordnance Storage Area from the substation in the High Pressure Gas Storage Area.

No emergency power is supplied to the Ordnance Storage Area.

2.5.2.4.6 Barge Terminal Facility. Power is supplied at 480V to the Barge Terminal Facility from the substation in the High Pressure Gas Storage Area.

No emergency power is supplied to the Barge Terminal Facility.

2.5.2.4.7 Launch Equipment Shop. Three phase industrial power at 13.8KV is supplied to the Launch Equipment Shop from oil switches in the VAB. A substation supplies the required voltage to the loads.

No emergency power is supplied to the Launch Equipment Shop.

2.5.2.4.8 Mobile Launcher Erection Area. This area is served three phase power at 13.8KV by an overhead line from the 69KV main substation. A substation in the area supplies the required voltage to the loads.

2.5.2.4.9 Instrumentation Facility. Three phase industrial and instrumentation power at 13.8KV is supplied to sub-stations in the Instrumentation Facility from oil switches in the VAB. The substations supply 120/208V power to the instrumentation bus and the industrial bus. (See Figure 2.0-14)

Emergency power in the Instrumentation Facility is supplied by a 250KW, 120/208V diesel generator located in the facility. Upon loss of normal power the generator is automatically started and is automatically connected to the instrumentation bus. A portion of the industrial bus can be manually connected to the emergency generator to maintain critical air conditioning.

2.5.2.5 Crawlerway Area

2.5.2.5.1 Converter Compressor Facility. Three phase industrial power is supplied at 13.8KV over two feeders to Switching Station #1A which, in turn, supplies power to three substations in the facility. The 480V bus in each substation can be connected to the bus of the adjacent substation in the event a transformer should fail. However, the reactors used in the gas conversion process draw a heavy load and only one reactor can be used when a single transformer is supplying power to two buses.

The substations supply loads at 480V. In addition to the Gas Converter, power is also supplied to Data Link Repeater Buildings 1 and 2. (See Figure 2.0-15)

Emergency power for CCF lighting is supplied by batteries.

2.5.2.5.2 Mobile Servicing Structure Park. Three phase power is supplied to substation. Two 13.8KV feeders supply the two industrial buses. One 13.8KV feeder supplies the instrumentation bus. Switching Station #1 supplies industrial power to the Mobile Servicing Structure

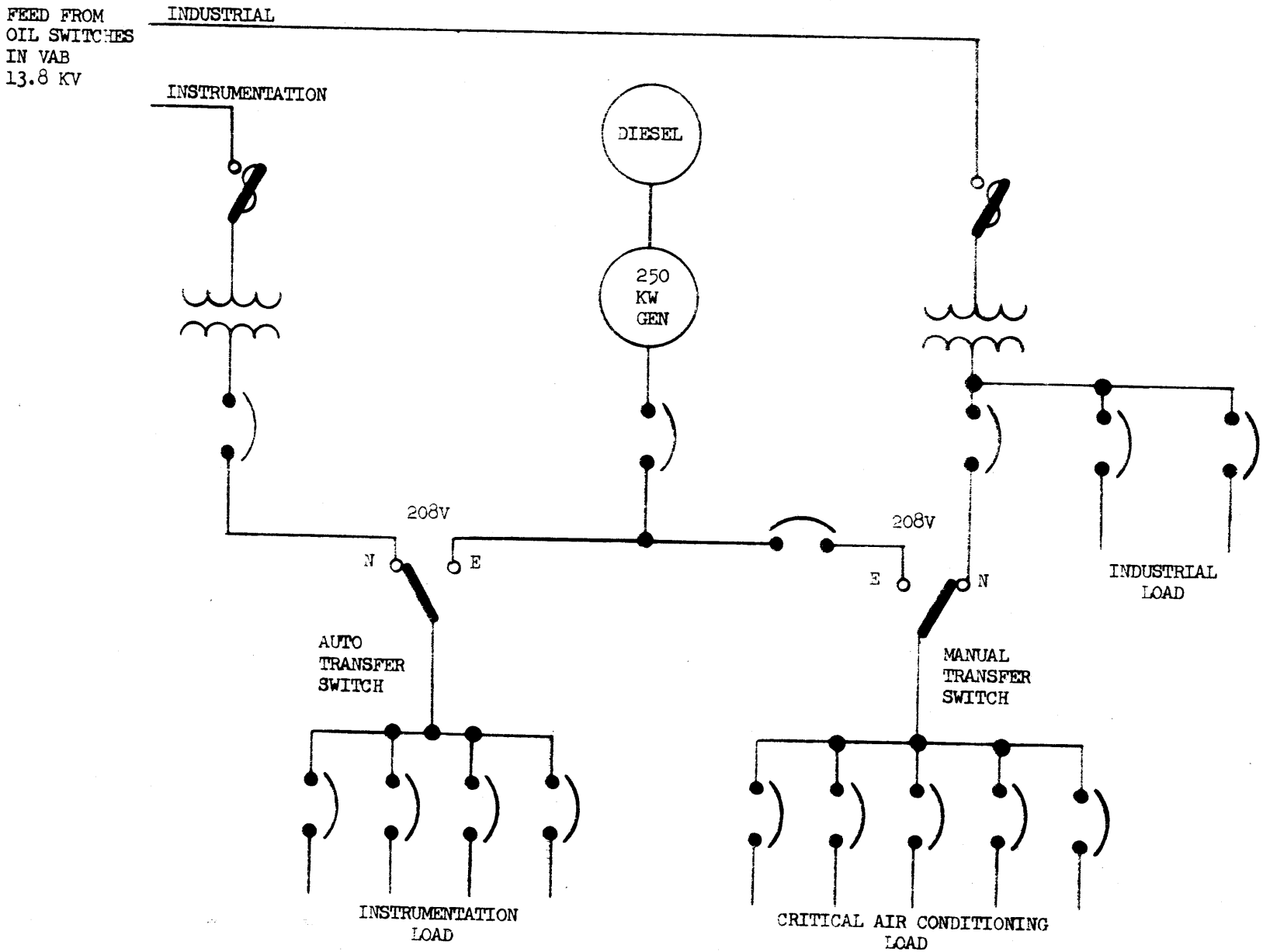

INSTRUMENTATION BUILDING
POWER DISTRIBUTION

FIGURE 2.0-14

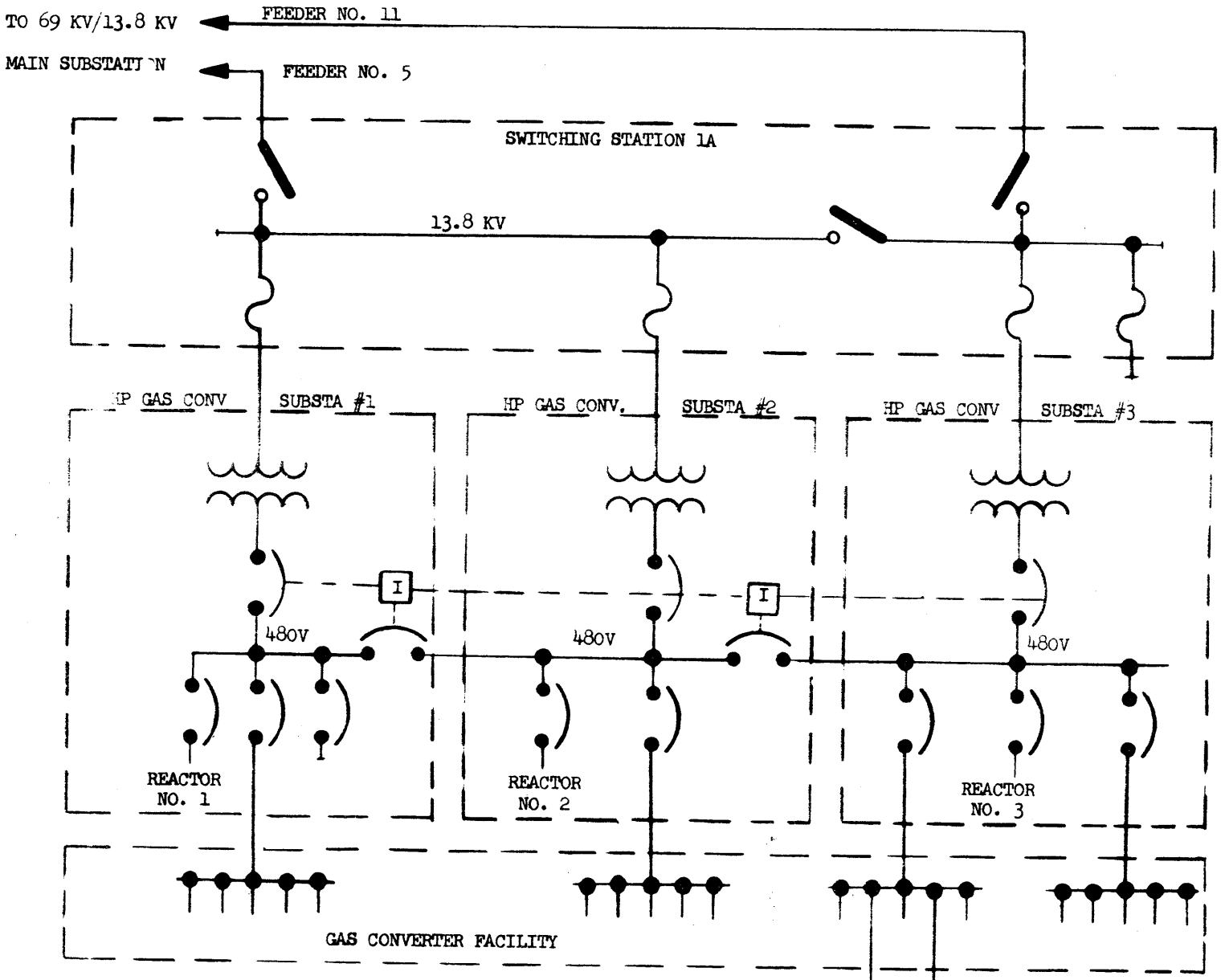

SWITCHING STATION 1A AND CONVERTER COMPRESSOR FACILITY POWER DISTRIBUTION

FIGURE 2.0-15

Park. The three feeders continue on to Switching Station #2 at Pad A, and also to Switching Station #3, at Pad B. (See Figure 2.0-16)

Loads in the MSS Park are supplied by a substation which receives three phase power at 13.8KV and supplies the required voltage to the loads.

Three phase industrial power at 13.8KV is provided by Switching Station #1 to the Mobile Servicing Structure interface unit in the MSS Park.

The Mobile Servicing Structure has its own emergency power generators. (See Paragraph 2.5.2.9)

2.5.2.6 Launch Pad A Area. Three phase power at 13.8KV is supplied from Switching Station #1 to Switching Station #2, which distributes power to the various substations in the pad area. Switching Station #2 has two industrial power buses and one instrumentation power bus. Each bus can be connected to the adjacent bus in the event of a power failure. (See Figure 2.0-17) The substations in the pad area supply power at 480V with exception to 4160V, which is supplied three phase power to the fire water booster pump motors and the LOX pump motors. Substations are located in the pad area as follows:

a. Remote Air Intake.

b. LOX Facility.

c. Main Gate.

d. LOX Pump.

e. ECS (2 substations).

f. RP-1/LH_2 Facility.

g. Fire Water Booster Pump.

h. PTCR-Industrial.

i. PTCR-Instrumentation.

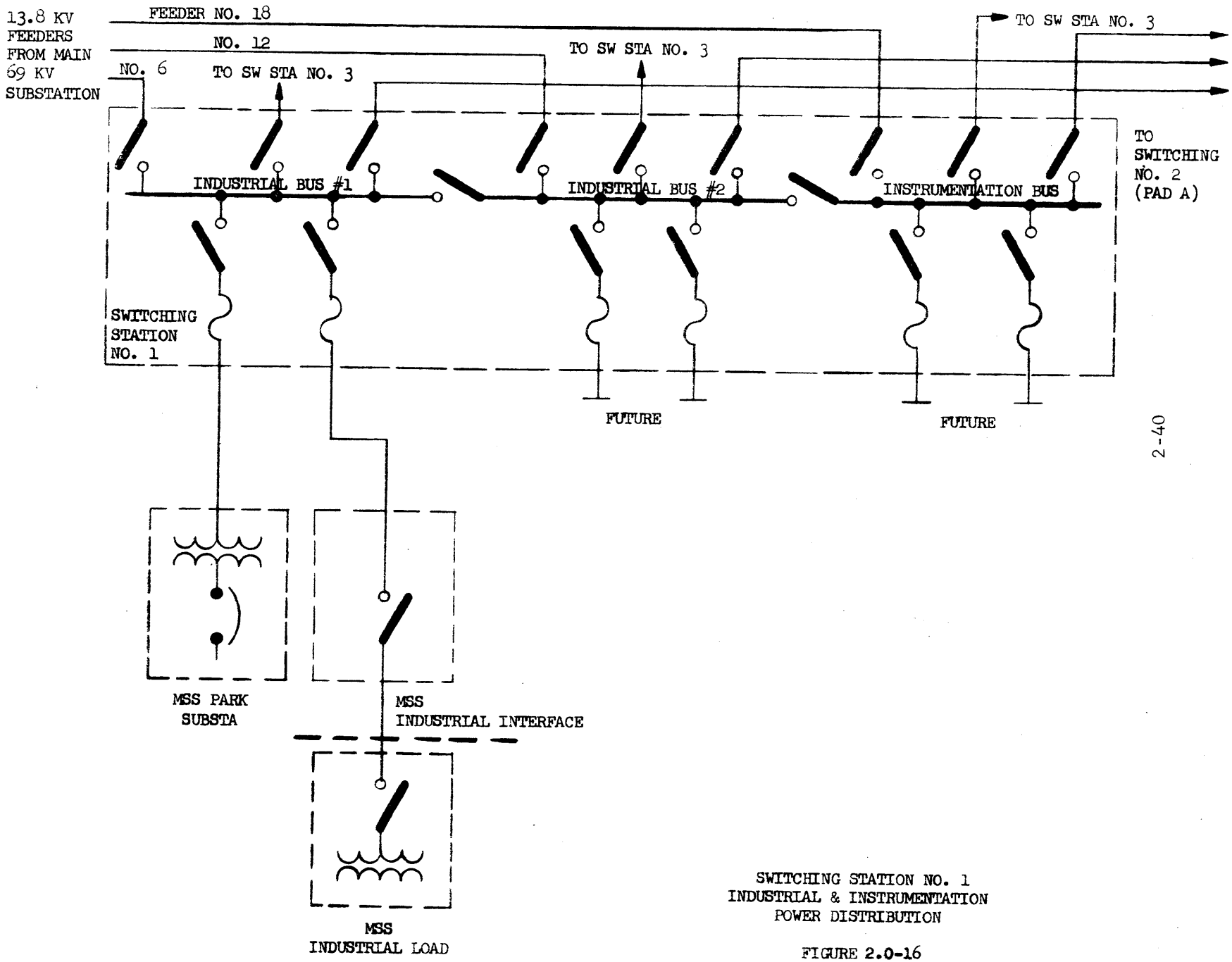

SWITCHING STATION NO. 1
INDUSTRIAL & INSTRUMENTATION
POWER DISTRIBUTION

FIGURE 2.0-16

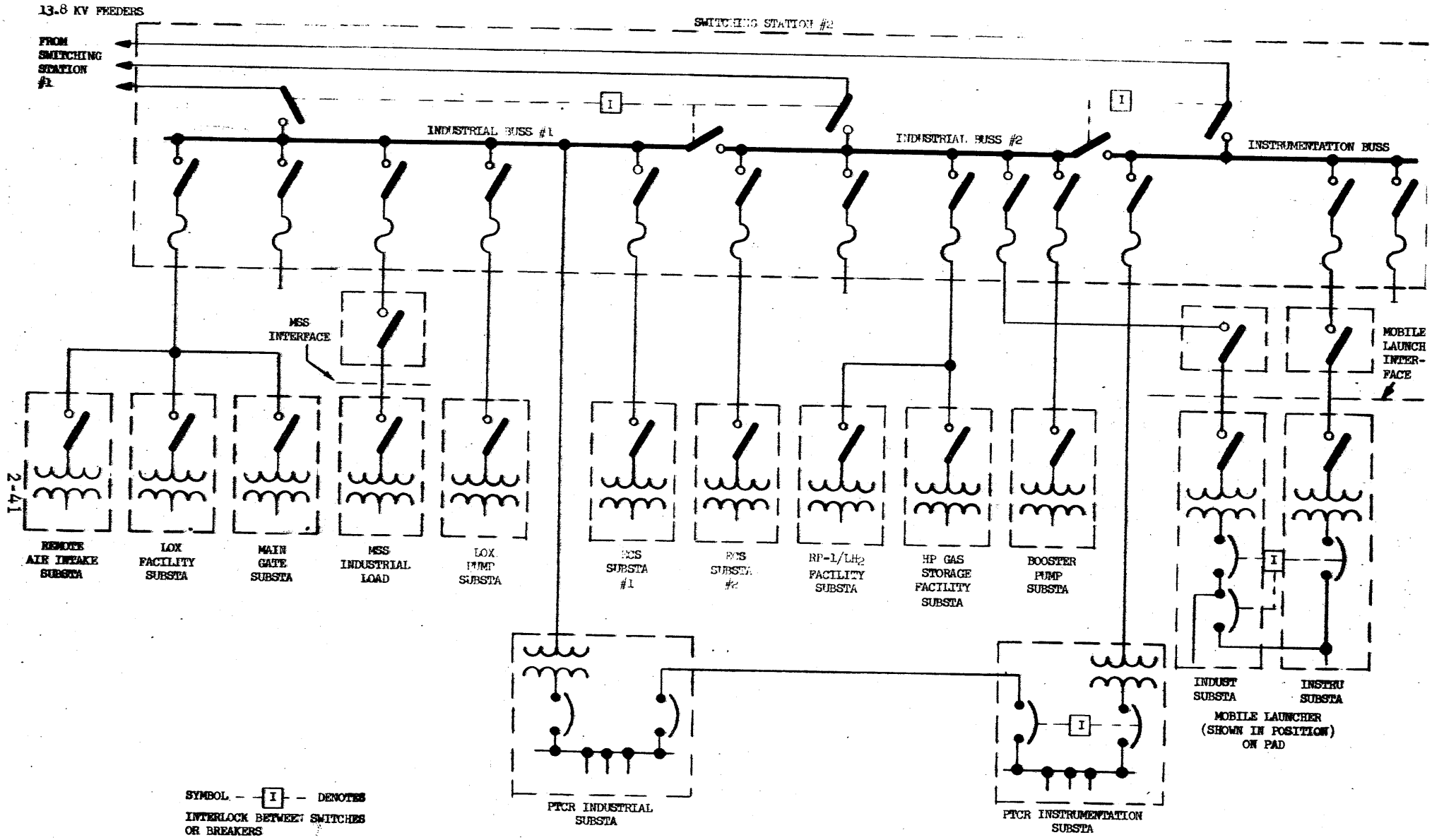

SWITCHING STATION NO. 2 AND LAUNCH PAD "A"
INDUSTRIAL AND INSTRUMENTATION POWER DISTRIBUTION

FIGURE 2.0-17

In addition to the pad area substations, Switching Station #2 supplies three phase 13.8KV power directly to:

a. Mobile Servicing Structure Interface - industrial.

b. Mobile Launch Interface - industrial.

c. Mobile Launch Interface - instrumentation.

Emergency power on the pad is supplied by a 300KW, 480V diesel generator located in the PTCR building.

Upon loss of normal power, the generator is started automatically. An automatic transfer switch supplies emergency power to critical circuits in the area, including two circuits to the Mobile Launcher Interface. Automatic transfer switches on the Mobile Launcher transfer the critical loads to the emergency power system. (See Figure 2.0-18) Also, critical loads in the pad area include critical lighting and obstruction lighting.

2.5.2.7 Pad Water Pumping Station. The Pad Water Pumping Station is located on the crawlerway between Pad A and Pad B. It is supplied three phase, 13.8KV power from the industrial bus of Switching Station #3. A substation at the pumping station provides 480V power.

No Emergency Power is supplied to the Pad Water Pumping Station.

2.5.2.8 Mobile Launcher. Three phase industrial and instrumentation power at 13.8KV is supplied to the Mobile Launcher frpm interfaces at the VAB and the launch pad. Industrial power and instrumentation power are supplied through separate substations, however, instrumentation loads can be fed off the industrail substation should the normal supply be lost. The substations supply 480V power to loads.

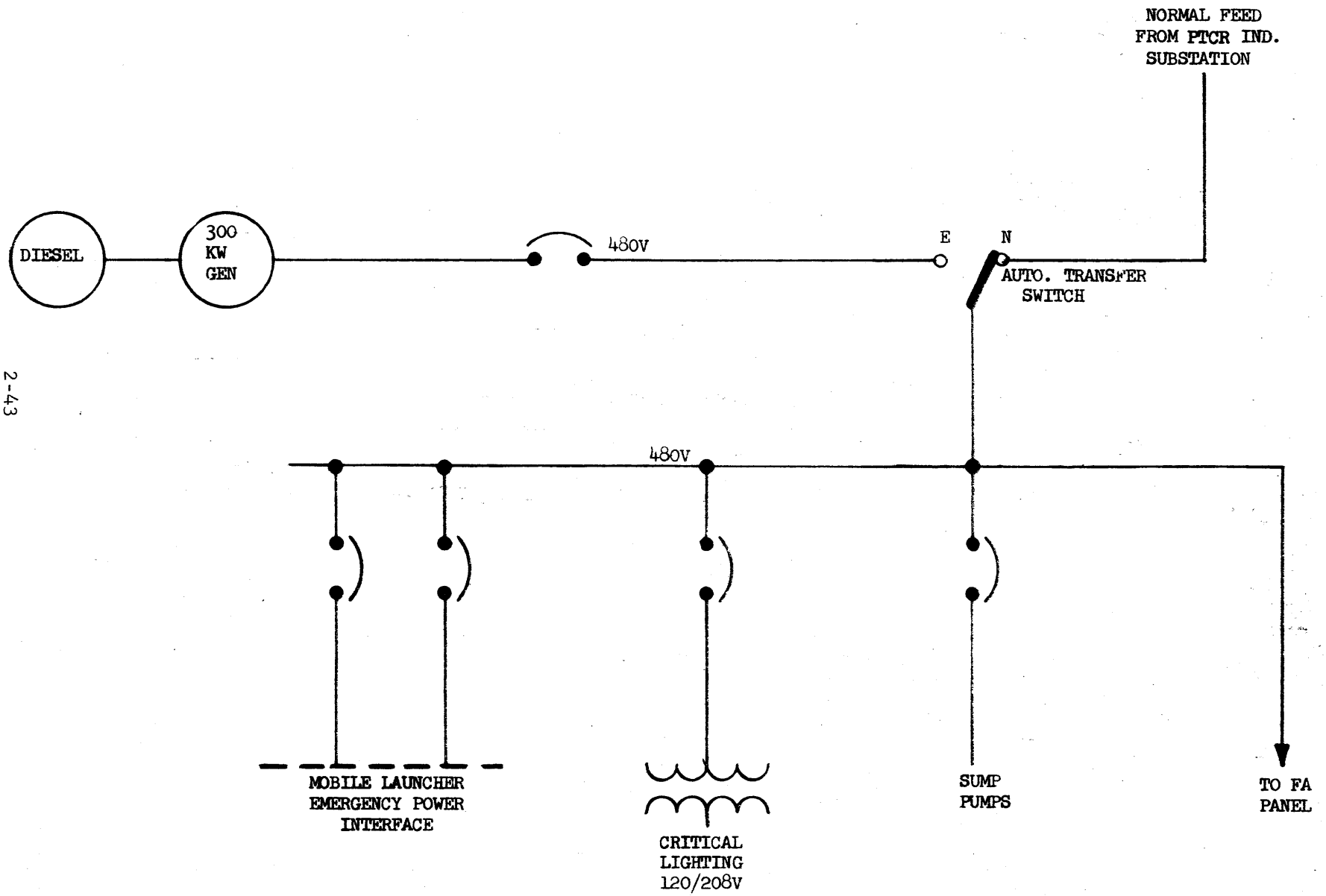

PAD AREA EMERGENCY POWER DISTRIBUTION

FIGURE 2.0-18

The ML emergency power circuits supply critical lighting, critical air conditioning, an elevator, and essential vehicle support. Emergency power at 480V is available to the Mobile Launcher during transit and at the pad. Emergency power is not available at the VAB.

A manual transfer switch on the Mobile Launcher provides for connection of the emergency circuits to either the Pad Emergency Power Interface or the In-Transit Crawler Power Interface. At the Pad, emergency power is supplied from the diesel generator in the PTCR building. Automatic transfer switches in the Mobile Launcher switch critical loads to the emergency supply in the event normal power is lost. In transit, power is available to the emergency circuits only. This power is supplied from diesel generators aboard the Crawler/Transporter. Figure 2.0-19 is a functional diagram of power distribution on the Mobile Launcher.

2.5.2.9 Mobile Servicing Structure (MSS). Three phase industrial power is fed to the MSS at 13.8KV from interface units located in the MSS Park area and at the pad. A substation located in the MSS provides 480V to loads.

In transit, power is available to the emergency system only. This power is supplied from diesel generators aboard the Crawler/Transporter. Manual transfer switches are provided to switch from normal power to in-transit Crawler power.

On-board emergency power is available to the MSS at all times. Two 150KW, 480V, emergency diesel generators located on the MSS supply critical loads during loss of power from either the unit substation or the Crawler/Transporter. The generators are automatically started and are connected to the

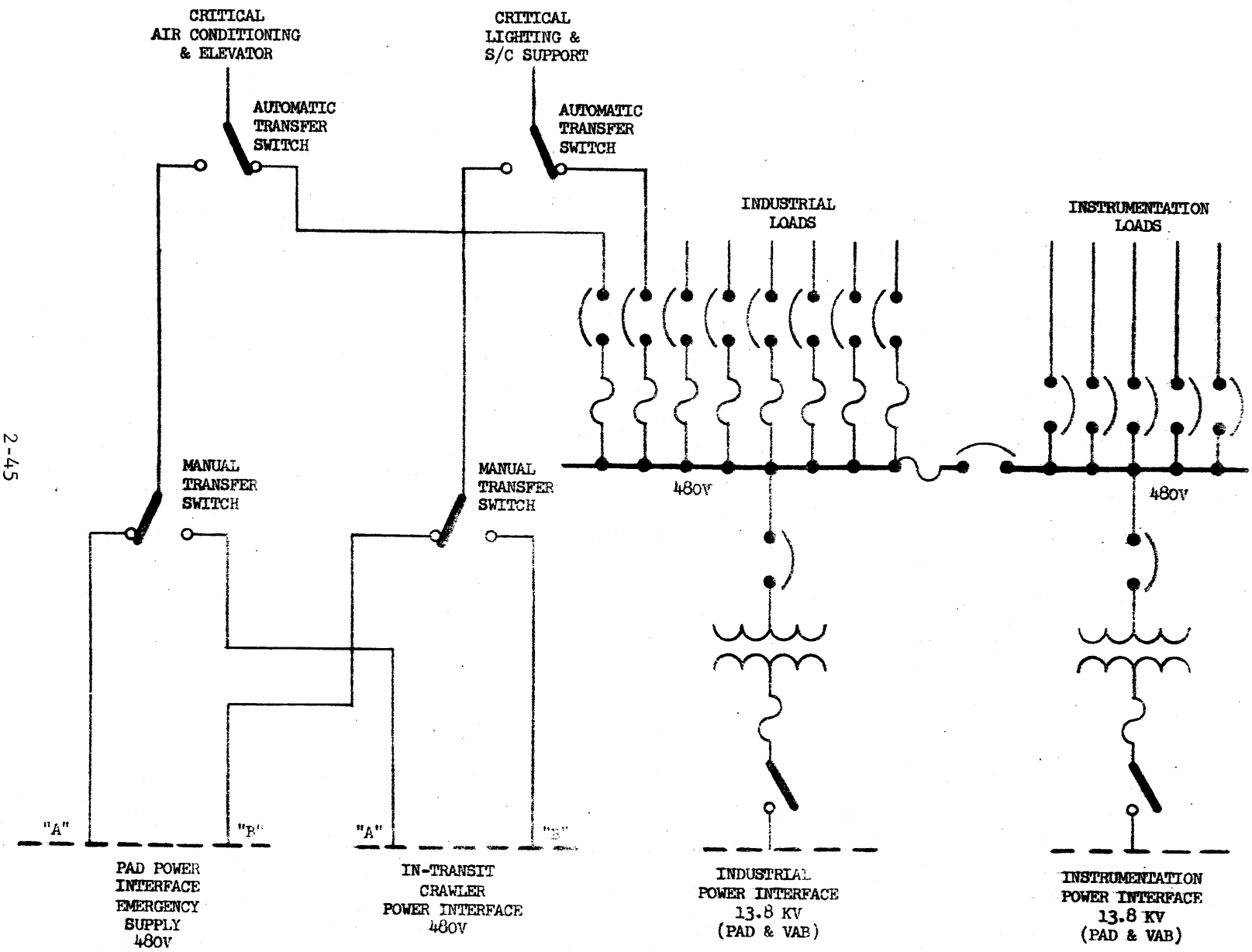

MOBILE LAUNCHER
POWER DISTRIBUTION

FIGURE 2.0-19

critical loads by an automatic transfer switch. One generator supplies power to elevator #2. The other generator supplies power to critical lighting, hoists, and hydraulic systems.

Figure 2.0-20 is a functional diagram of power distribution on the MSS.

2.6 HEATING, VENTILATING AND AIR CONDITIONING

2.6.1 Function. The heating, ventilating and air conditioning systems provide environmental control of areas for equipment operation and protection and for personnel comfort.

2.6.2 Location. HVAC systems are provided in the VAB, ML, and PTCR.

2.6.3 Description. These systems descriptions are presented as part of the description of the facility where located. For the description see Paragraphs as follows: VAB, Par. 1.1; ML, Par. 1.9; PTCR, Par. 1.15.

2.7 ELEVATORS

2.7.1 Function. The elevators furnish passenger and freight service for vertical access.

Elevators are located in the VAB, LCC, ML, MSS, PTCR and Launch Pad.

2.7.2 Description. The elevators are described as part of the facility which they serve. For these descriptions see the following paragraphs: VAB, Par. 1.1; LCC, Par. 1.3; ML, Par. 1.9; MSS, Par. 1.13; Pad and PTCR, Par. 1.15.

2.8 FIRE ALARM AND PROTECTION SYSTEM

2.8.1 Function. The Fire Alarm System notifies personnel of the existence of fire, notifies the fire department of the existance and location of fires, and in certain areas automatically initiates protective devices such as sprinkler, flooding, and foam systems.

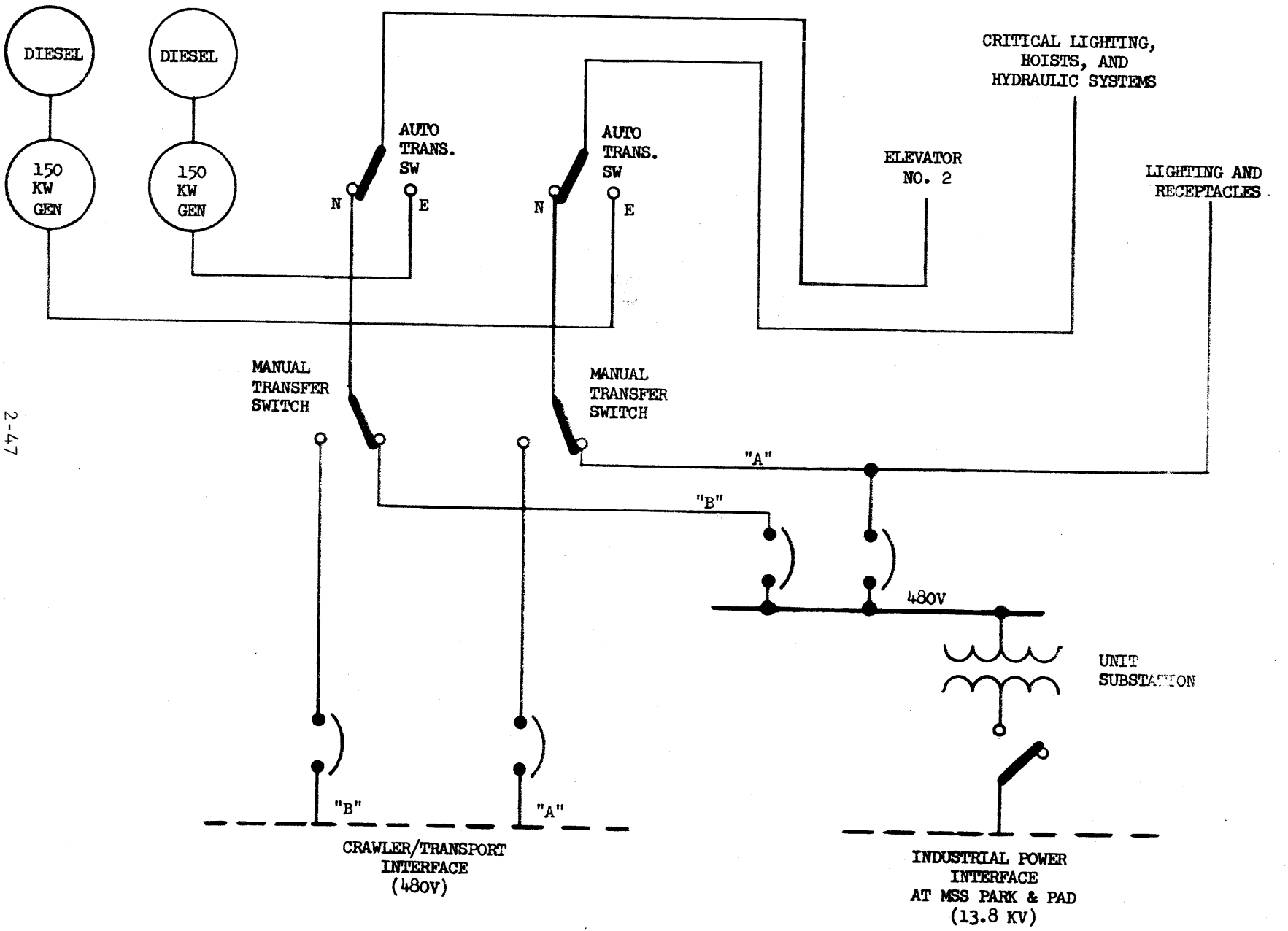

MOBILE SERVICING STRUCTURE POWER DISTRIBUTION

FIGURE 2.0-20

2.8.2 Description

2.8.2.1 General.

NOTE: The system described herein is that now planned for LC39. Plans are underway to improve the system.

The Fire Alarm System is composed of one central system loop, with subsystems located in the Utility Annex and on the pads. The Utility Annex subsystem provides loops for the VAB and facilities in the VAB area. The pad subsystems feed radially to various facilities in the pad area. The central loop connects all MILA facilities, however, location of fires within the Utility Annex and pad subsystems cannot be pinpointed to specific locations within the subsystem.

Fire Alarm System equipment includes manual non-coded fire alarm boxes, automatic fire detectors, alarm gongs and horns, coded transmitters which provide location information on looped systems, control panels, and auxiliary protective system contacts. These devices are interconnected by signal circuits to complete the system.

Fire Alarm System displays are located in the CCC and the MILA Central Fire Station. Local subsystem displays are located in the Utility Annex and pad areas. See Figure 2.0-21.

2.8.2.2 VAB. Loop circuits are provided to the various VAB areas, and tie into the Fire Alarm Headquarters in the Utility Annex. These loop circuits connect coded transmitters in specific locations. These coded transmitters are actuated by manual alarm boxes, fire detectors, and sprinkler valves. Each transmitter is connected to a control panel which

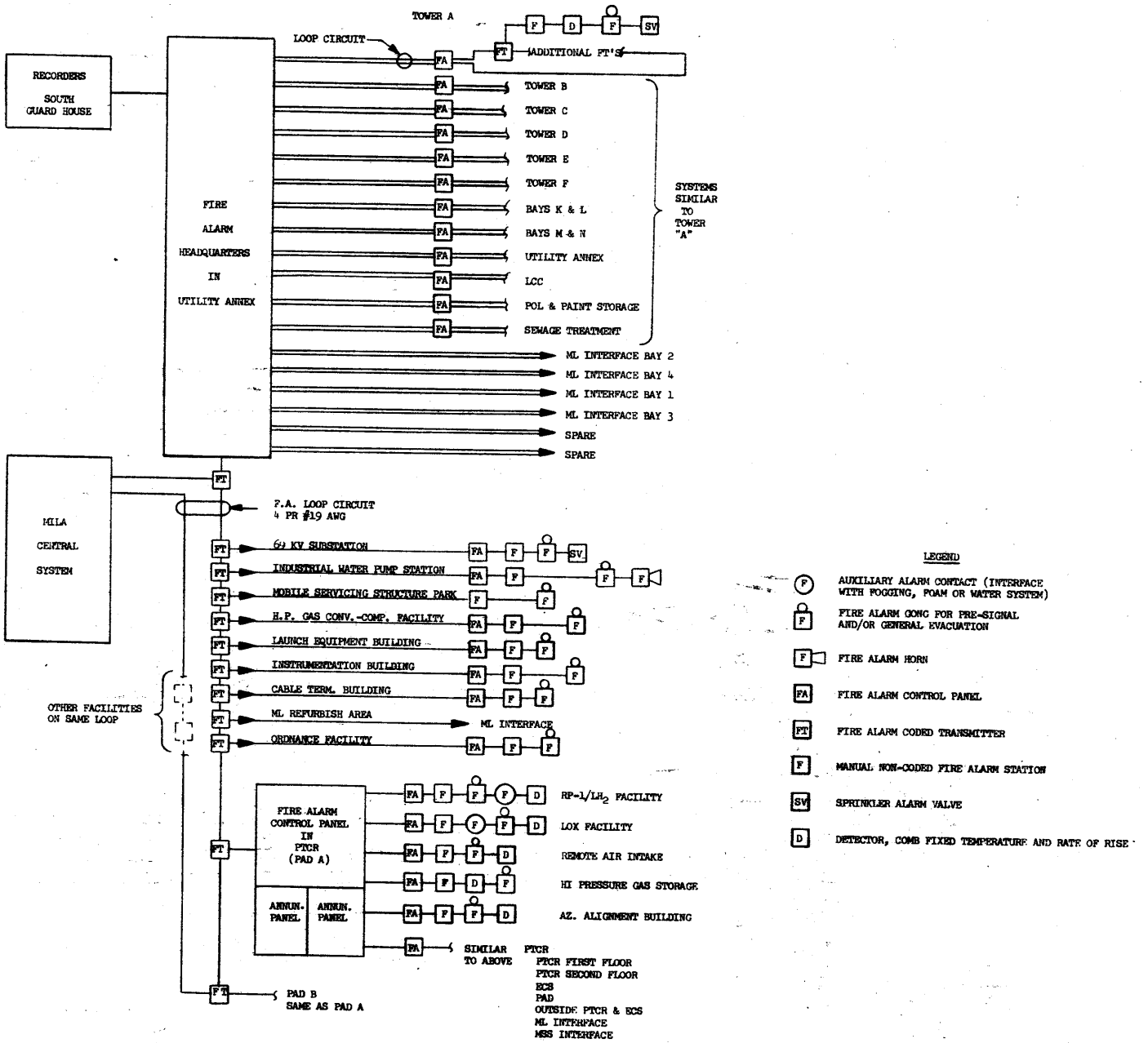

COMPLEX 39 FIRE ALARM SYSTEM (EXISTING)

FIGURE 2.0-21

provides control functions on the loop and provides for alarm actuation. Loop circuits are also provided to the Mobile Launcher interfaces.

2.8.2.3 Utilities Annex. The Utilities Annex has one loop circuit similar to those in the VAB. The Fire Alarm Headquarters for the VAB is located in the Utilities Annex. Any fire alarm in this subsystem will be transmitted to the central system loop, however, the central loop system will not have the ability to pinpoint the location of the fire within the subsystem.

2.8.2.4 Other Utilities Annex Subsystem Facilities. Loops from the Utilities Annex, similar to those described are provided to the LCC, Paint and Storage Area, and Sewage Treatment Plant. Two spare circuits are provided.

2.8.2.5 Central Loop Facilities. The following facilities have coded transmitters tied into the central loop. Each facility has alarm and detection devices as necessary for its protection. Those facilities include:

a. 69KV Substation.

b. Industrial Water Pumping Station.

c. MSS Park.

d. H.P. Gas Converter - Compressor Facility.

e. Launch Equipment Building.

f. Instrumentation Building.

g. Cable Termination Building.

h. ML Refurbish Area.

i. Ordnance Facility.

j. Other facilities may be added to this loop as required.

Alarms on the central loop are displayed in the MILA Central Fire Station and the monitor station in the CCC.

2.8.2.6 Launch Pads. The Launch Pads have subsystems tied into the central loop in a manner similar to the subsystem in the Utilities Annex. The subsystems for Pad A and Pad B are identical, and only one will be described.

The pad subsystem is a radial system which terminates in the control panel in the PTCR Building. A display panel in the PTCR Building provides alarm indications for the various facilities in the pad area. Each facility has detection and alarm devices as necessary for its protection. These facilities include:

a. RP-1/LH_2 Facility.

b. LOX Facility.

c. Remote Air Intake.

d. High Pressure Gas Storage.

e. Azimuth Alignment Building.

f. PTCR, ECS, Pad, etc.

g. MSS Interface.

h. ML Interface.

As in the Utility Annex Subsystem, alarms from the pad subsystem are picked up on the central loop, however, the central loop system will not be able to pinpoint the location of the fire within the pad subsystem.

2.8.2.7 Mobile Launcher (ML). The Mobile Launcher has its own self-sustaining fire alarm system. It is composed of automatic detectors, manual alarm boxes, alarm sounding devices, and sprinkler valve monitors. Interface connections are provided at the VAB, refurbish area, and pad for connection to area systems.

2.8.2.8 Mobile Servicing Structure (MSS). The fire alarm system on the MSS is similar to that on the ML. Interfaces to area systems are provided at the pad and the MSS park.

2.9 AREA WARNING SYSTEM

2.9.1 Function. The Area Warning System function provides warning to personnel within a hazardous area and to control access to that area.

2.9.2 System Description. The presently designed system consists of safety signals that control access to the crawlerway and Pad A.

2.9.2.1 Launch Pad. There are 10 safety signals located on the Launch Pad. Two of these are located on the stairs at the west edge of the raised portion of the pad. The other eight are traffic signal type installations on stanchions and are located on the roads about the pad. They control access to the pad, fuel facilities, and launcher area. Control of all pad signals is from the PTCR safety signal panel, while the lights at the fuel facilities have local controls also. The signals all show four indications and are provided with interpretive signs stating:

a. Red - Danger! Clear Area.

b. Flashing Amber - Hazardous! Do not enter.

c. Amber - Enter with caution.

d. Green - All clear.

2.9.2.2 Crawlerway. There are four lights for the Safety Signal System located on the crawlerway to display the same indications and interpretations as those on the pad. Three of the lights are mounted at the VAB Area/Crawlerway criteria limits; one light is identified for each of the pads (A, B or C) and warns personnel as they leave the VAB limits. The one remaining signal is on the crawlerway at the arming tower park area and controls access

to the pad from the park area. Control of all of the crawlerway signals is from the safety signal panel in the LCC.

2.9.3 CCC Control Concept. The Area Warning System will include operation of visual and audio warning for the entire complex, with monitor/control centralized in the CCC. Monitoring of signal conditions is necessary to assure that the affected areas are being warned.

2.10 PNEUMATICS SYSTEM

2.10.1 Function. The Pneumatics Supply System for Complex 39 consists of all those components necessary for the storage, generation and distribution of gaseous nitrogen, helium, and gaseous hydrogen; distribution is made to all levels of the pad, Mobile Launcher, Mobile Servicing Structure, and Vehicle Assembly Building. The entire systems for hazard proofing and environmental proofing of electrical enclosures are also included. See Figure 2.0-22.

2.10.2 Systems Description

2.10.2.1 Converter Compressor Facility. The CCF converts liquid nitrogen to low pressure gaseous nitrogen, converts liquid nitrogen to high pressure gaseous nitrogen, and compresses low pressure gaseous helium to a higher pressure. The facility consists of a 500,000 gallon capacity liquid nitrogen dewar, six high pressure liquid nitrogen pump and vaporized units, two low pressure liquid nitrogen pump and vaporizer units and five high pressure helium compressors. There is provision for ten tube bank railroad cars for helium supply, and the systems of control, monitoring and analysis incident to distributing these gases. From the CCF, high pressure helium and nitrogen gases are directed via overland pipe lines to two storage batteries, one located at the launch pad, the other located just east of the VAB.

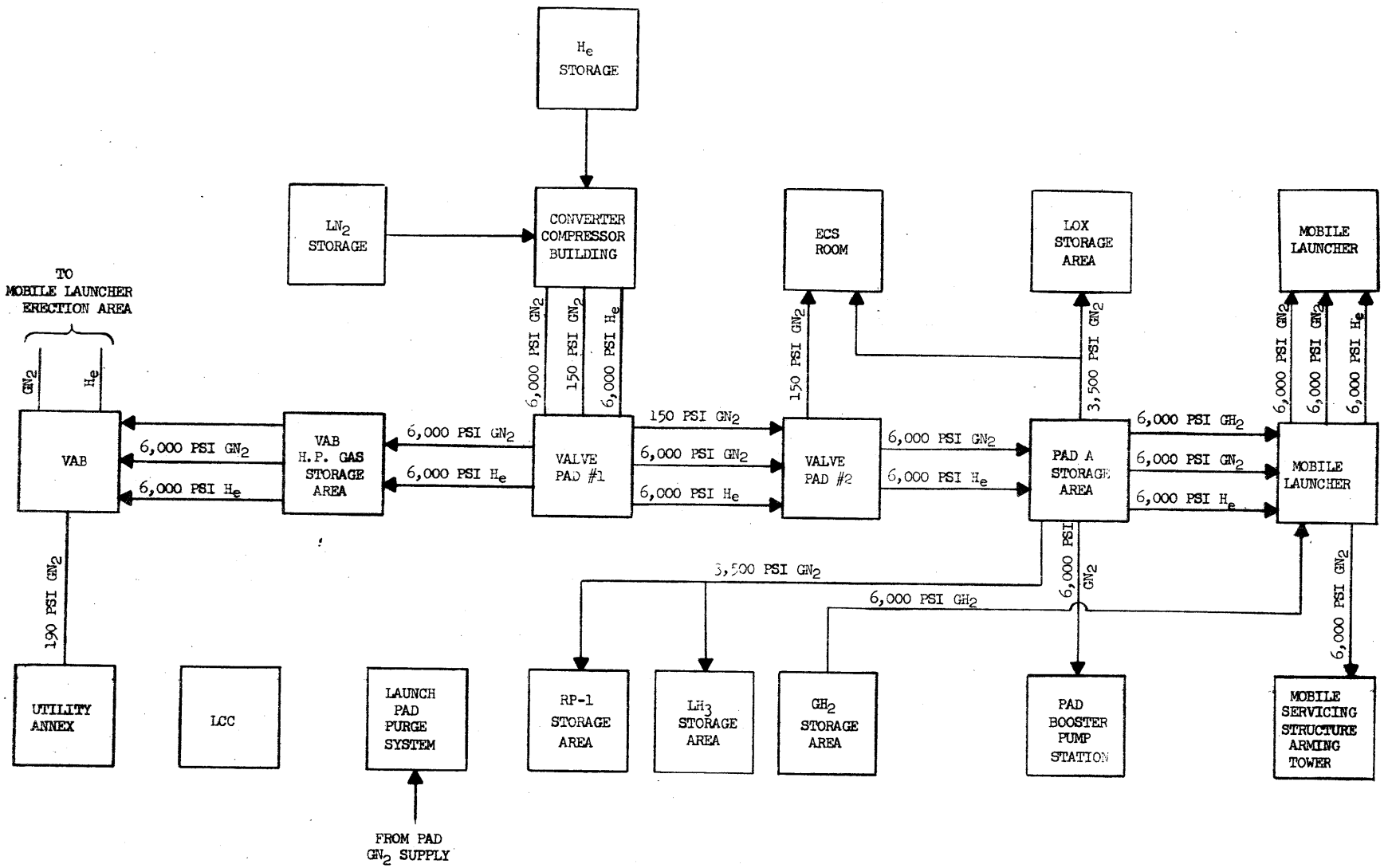

PNEUMATIC SUPPLY SYSTEM

FIGURE 2.0-22

2.10.2.2 Launch Pad. Nitrogen and helium at 6,000 psi are piped overland via three-inch lines to the launch pad storage battery. Low pressure nitrogen at 150 psi is piped overland via a 14-inch line directly to the environmental control system at the pad. The high pressure storage battery provides storage for 3,000 cu. ft. of GN_2 and 9,000 cu. ft. of He at 6,000 psi. Nitrogen at 3,500 psi is distributed from the pad storage bank to the LOX, RP-1, LH_2, and ECS control areas. Nitrogen and helium at 6,000 psi are distributed to the ML interface. Nitrogen at 6,000 psi is supplied to the water deluge system.

Gaseous hydrogen is generated by two portable recharger units located at the liquid hydrogen storage facility. Each recharger has a capacity of 500 SCFM at a pressure of 6,000 psi. The gaseous hydrogen is distributed to the ML interface.

2.10.2.3 Mobile Launcher. At the launch pad the ML receives nitrogen and helium at 6,000 psi via three-inch lines from the pad storage battery. The purge gas system on the ML consists of two risers, one is fed from valve panel 12 on the 160' level and extends up to the 380' level and down to the 0' level. The other riser is fed from a valve panel on the A level, and purges equipment enclosures on the 0' level. The equipment enclosures are fed 50 psi GN_2 through a calibrated orifice with a relief vent on each enclosure set for 2" water column. There are about 500 enclosures purged on the ML.

2.10.2.4 Mobile Servicing Structure. The Mobile Servicing Structure hazard proofing system distributes gaseous nitrogen to all MSS levels and work platforms. The nitrogen gas is supplied from the MSS interface panel

on the ML. As an alternate supply, nitrogen is stored in ten 2,200 psig "K" bottles.

The nitrogen is used as a purge gas for electric motors, electrical equipment enclosures, and hydraulic reservoirs.

The compressed air system is inter-connected with the nitrogen purge system such that air can be used as an alternate purging gas.

2.10.2.5 VAB High Bay and Low Bay. The VAB contains two main systems for high pressure distribution. They are the high pressure GN_2 and GHe systems. They are supplied from a storage bank located at the VAB storage building.

The capacity of the VAB storage is 6,000 cf each for He and GN_2. From a gas system standpoint the VAB may be considered to be divided into four geographical sections. Section one includes towers D, E and F. Section two includes areas M and N. Section three includes towers A, B and C. Section four includes areas K and L. Control of the gas flow in the building is provided by hand shutoff valves. The arrangement of the valves enables the user to provide gas to each of the four sections individually or simultaneously. Nitrogen and helium at 6,000 psi is delivered to the VAB via three-inch lines. The point of entry is at the ground floor of tower D. At this point, the lines are divided and valved such that one set of risers serves towers D, E and F, another set passes through regulating station #7 and #24 which reduces the pressure to 3,000 psi and supplies areas M and N. The other set passes through a tunnel under the transfer aisle to tower A. Shutoff valves are provided at the entrance and exit to the tunnel. In tower A, the lines are divided again,

one set serving towers A, B and C, the other set passes through regulating stations #1 and #29 reducing the pressure to 3,000 psi and supplies areas K and L.

2.10.2.6 Utility Annex. Nitrogen gas at 190 psi and a flow of 30 SCFM is provided to the Utility Annex from the regulating station located in the VAB area.

2.11 HAZARDS MONITORING SYSTEM

2.11.1 Function. The Hazards Monitoring System detects hazardous conditions which may occur during storage and handling of propellants and pressurized gases. The system is designed to provide discrete "on-off" visual indication and/or alarms which will be activated before an explosive mixture, toxic level of concentration, and/or minimum oxygen level are present at any monitored area.

2.11.2 Description.

2.11.2.1 General. The Hazards Monitoring System provides hazard detection in the pad area, the ML, MSS and the Fluid Test Complex. Displays and alarms are provided on location as required and also on the Hazard Monitoring Console in the Complex Control Center. The Hazard Monitoring Console interfaces with the meteorological, fire alarm, pneumatics and area warning systems. The Hazard Monitoring System is activated only during the times of storage and handling of potentially hazardous materials. Hazard monitoring will not be necessary at times when lines, tanks, etc. are not in use and purged with inert gas.

2.11.2.2 Pad "A" Area.

2.11.2.2.1 Liquid Hydrogen. Leak detection sensors and fire detection sensors are located in the following areas:

a. LH_2 Storage Area and Cross Country Piping.

b. LH_2 Burn Pond.

c. Pad Hydrogen Piping Trenches.

These sensors are located at valve complexes, vaporizers, and at flange and flexible joints. The detectors include infra-red, leak, ultra-violet and hot wire types.

2.11.2.2.2 Gaseous Hydrogen. Gaseous hydrogen leak detection is provided by general area monitoring, with careful placement of sensors at suspected leak points, gas build-up in pocket areas, etc. Areas receiving special attention include:

a. Mobile recharger.

b. Storage bottles and manifold.

c. Connection points.

d. Vent piping to burn stack.

2.11.2.2.3 Oxygen (Liquid & Gaseous). Liquid oxygen is not monitored except by the OTV system. Gaseous oxygen hazards are unlikely, and monitoring is unnecessary.

2.11.2.2.4 Hypergolics. The UDMH, MMH, and N_2O_4 monitored for hazardous conditions include:

a. Operations at the Transfer (storage) Units.

b. Cross-country lines.

c. Valving complexes.

d. Transfer Unit

e. Interface to MSS and ML.

2.11.2.2.5 Oxygen Level Monitoring. Several areas in the pad vacinity are subject to intrusion of GN_2, GH_2 and GHe due to leaks and during purging operations. Since danger to personnel exists when the oxygen concentration falls to around 15%, areas subject to oxygen depletion are provided with a detection and local alarm system as well as summary indication on the Hazards Monitoring Console.

2.11.2.3 Mobile Launcher

2.11.2.3.1 Liquid Hydrogen. Monitor areas include disconnect piping transfer lines, valve complexes, and swing arm connections. Both leak and fire detection is provided. Detection is provided by leak, infra-red, and ultra-violet detectors.

2.11.2.3.2 Gaseous Hydrogen. Detectors are provided at hazardous locations including flexible connections and propellant control curves.

2.11.2.3.3 Hypergolics. Hypergolic monitoring is similar to that described for the MSS.

2.11.2.3.4 Oxygen Level Monitoring. Same as described in Paragraph 2.11.2.2.5.

2.11.2.4 Mobile Servicing Structure

2.11.2.4.1 Liquid Hydrogen. Monitor areas include transfer lines and flexible connections.

2.11.2.4.2 Gaseous Hydrogen. Monitor of leakage and fire is provided in the following areas:

a. Booster Unit.

b. 22 ft. level flexible line.

c. Service Unit.

d. Valve Complex.

e. Umbilical Disconnect.

2.11.2.4.3 Hypergolics. Monitoring of hypergolic fueling operations is provided by hypergolic defectors in the following areas:

a. Transfer (storage) Units.

b. Valving complexes.

c. Interface connections.

2.11.2.4.5 Oxygen Level Monitoring. Same as described in Paragraph 2.11.2.2.5.

2.11.2.5 Fluid Test Complex (Industrial Area)

2.11.2.5.1 Hydrogen. Monitoring and detection of hydrogen leakage and fire is provided in the test cells of the two Cryogenic Test Buildings.

2.11.2.5.2 Hypergolics. Hypergolic leakage monitoring and detection is provided in the test cells of the two Hypergolic Test Buildings.

2.12 HIGH INTENSITY LIGHTING SYSTEM

2.12.1 Function. The High-Intensity Lighting System for LC39 augments lighting for photographic needs for night work and emergency conditions.

2.12.2 Description

2.12.2.1 General. High-intensity lighting supports instrumentation and documentary photography, and the Operational TV System in areas where normal lighting is insufficient for these operations. Activities requiring high-intensity lighting support include unloading and transportation

of units to the VAB, spacecraft assembly and checkout, vehicle checkout and mating within the VAB, transportation of the vehicle from the VAB to the pad, and launch operations. The High-Intensity Lighting System will provide daylight quality illumination in areas where color photography is required.

High-intensity lighting will utilize fixed, portable, and mobile equipment to meet the photographic requirements.

2.12.2.2 VAB Lighting. Normal building lighting in the lower VAB areas will generally be sufficient for photographic operations. However, on and above the 160 ft. level additional lighting is required. This supplemental lighting is provided by fixed floodlights and portable lights on the Mobile Launcher.

The fixed floodlights on the Mobile Launcher will be utilized while in the VAB. These floodlights provide illumination to the service arms and deck area. These are the same lights as those used to support launch photography and are described in Section 2.12.2.3.

Portable lights consist of adjustable floodlights (probably two) mounted on a folding tripod base. These are easily moved and are adjusted on location as required. These units will have a 45 ft. beam diameter and a 50 ft. minimum working distance.

Mobile floodlight units are also available for use as required in the VAB. These units are described in Section 2.12.2.4.

2.12.2.3 Vehicle Launch Area Lighting. While on the launch pad, the principal vehicle photographic lighting will be provided by the fixed floodlights on the Mobile Launcher and the pad perimeter searchlights.

Fixed floodlights on the Mobile Launcher will provide lighting primarily for the service arms, deck area, and the flame pit. These floodlights are explosion proof and are capable of withstanding the intense heat during launch.

Pad perimeter searchlights will be placed in a minimum of three positions around the pad perimeter approximately 1300 ft. from the vehicle. Each searchlight array is capable of:

a. Operating from 480 volt, 3 phase, 60 cycle power.

b. Tracking the vehicle for the first 1300 ft. of flight, by means of a servo-controlled drive mechanism that rotates the lamps about an elevation axis.

c. Automatically controlling lamp intensity which is a function of the arrays elevation angle.

d. Being controlled locally or remotely. The searchlight units will provide a uniform light intensity on the vehicle up through the first 1300 ft. of flight. These units are capable of synchronized operation, in response to an external elevation command signal.

High-intensity lighting in the pad area will be remotely controlled from the CCC during launch.

2.12.2.4 <u>In-Transit Lighting</u>. Unit unloading and transfer will not normally be scheduled as night operations. However, it is probable that unexpected delays may require night operations, for which mobile high-intensity lighting is provided.

Crawlerway activities include transfer of the space vehicle from the VAB to the pad, transfer of the MSS to and from the pad, and return of the ML to its

refurbish area. Some of the operations will occur at night, for which mobile high-intensity lighting is provided.

Mobile high-intensity lighting is provided by a trailer mounted wide beam floodlight array. Each array is capable of illuminating an area of 50 ft. high by 100 ft. wide from a minimum distance of 100 ft. The array has both mounting height and elevation angle adjustment, and operates from 480 volt, 3 phase, 60 cycle power. The trailer mounted unit is capable of operation while being towed at slow speeds; power for the lights is supplied by the towing vehicle or from other available sources. The light fixtures are explosion proof and can be operated in hazardous locations.

2.13 METEOROLOGICAL AND LIGHTNING PREDICTION SYSTEM

The system is divided into two areas - the meteorological system within Complex 39 and the ETR meteorological system which includes up range and down range weather stations, the wind system, data processing and display, and the dissemination of this data along with meteorological forecast.

2.13.1 Complex 39 Meteorological

2.13.1.1 Function. The micro meteorological measuring system for Complex 39 will define the fine scale structure of the atmosphere over several thousand feet in the horizontal plane and 500 feet in the vertical plane and will perform the following tasks: provide a warning system for electrical storms, measure magnitude of stroke on structures, gather data on existing wind conditions, and provide information on relative humidity, temperature, and barometric pressure. The measuring system will provide direct readouts and recording capability. Seismic and blast pressure data from the launch area will also be recorded on magnetic tape. (See Figure 2.0-23)

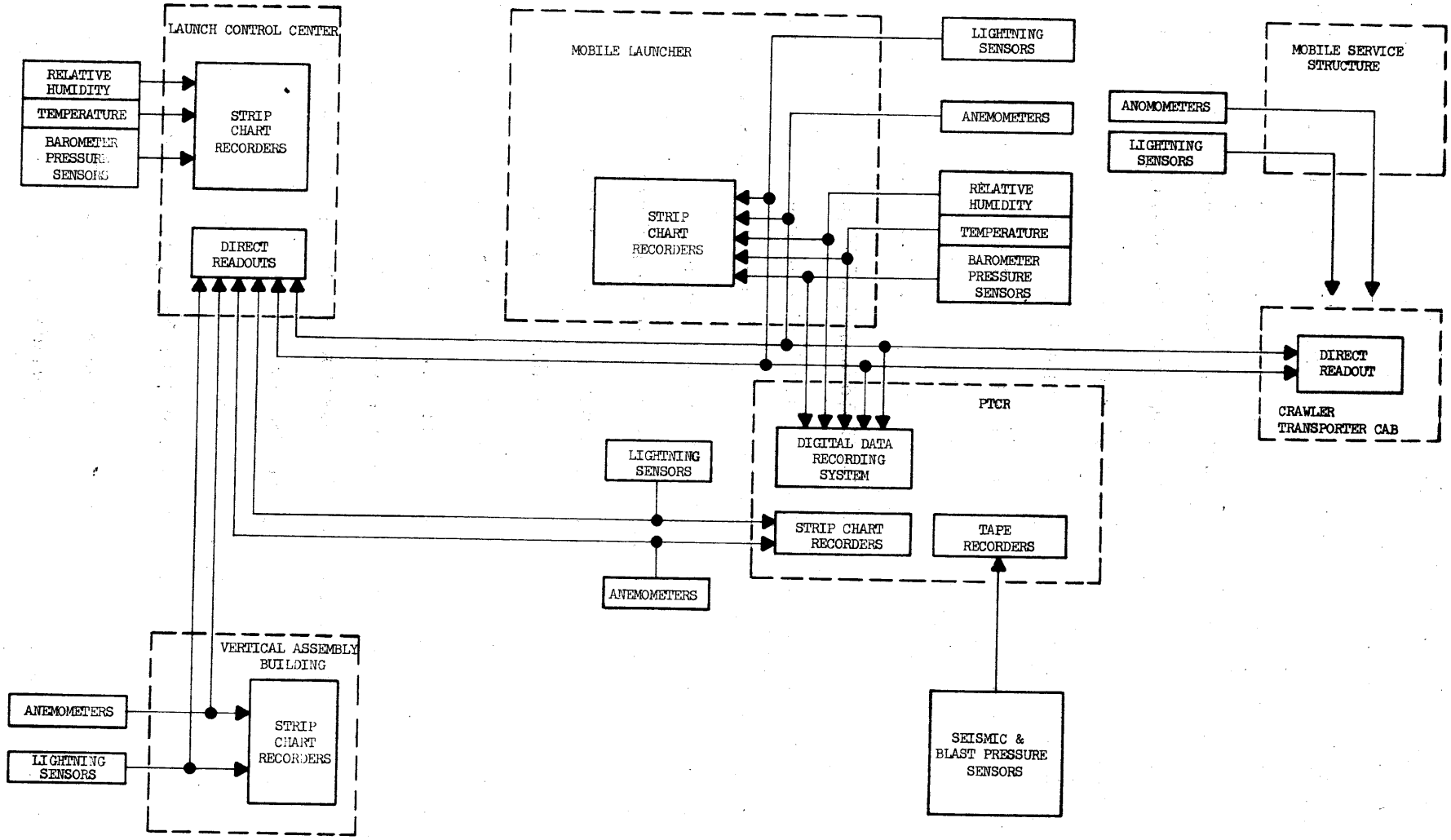

COMPLEX 39 METEOROLOGICAL MEASURING SYSTEM

FIGURE 2.0-23

2.13.1.2 Description. Anemometers and lightning sensors will be placed on each ML and MSS to furnish data during transit with direct readouts in the crawler-transporter cab. Anemometers and lightning sensors will also be located near the launch pad and on the VAB. Data from the devices will be recorded on strip-chart recorders along with relative humidity, temperature, and barometric pressure data. The Digital Recording System (DRS) located in the PTCR will be used to record selected meteorological data in digital format. Direct readouts in the LCC will provide a constant monitor on developing wind and lightning conditions.

2.13.2 ETR Meteorological System

2.13.2.1 Function. The ETR Meteorological System will provide meteorological information and real-time data to MILA users to aid in planning and conducting test operations. This system collects, processes and furnishes data to the MILA Meteorological System. (See Functional Diagram, Figure 2.0-24)

2.13.2.2 Description. The measurement of the atmospheric environment is accomplished by the use of standard and specialized meteorological instrumentation and equipment. The forecasting of significant phenomena is accomplished by applying standard professional prognostic techniques to measurements of existing conditions.

The Eastern Test Range meteorological instrumentation consists of the following:

a. Surface observing subsystems.

b. Tropospheric and stratospheric observing subsystem.

c. Meteorological center.

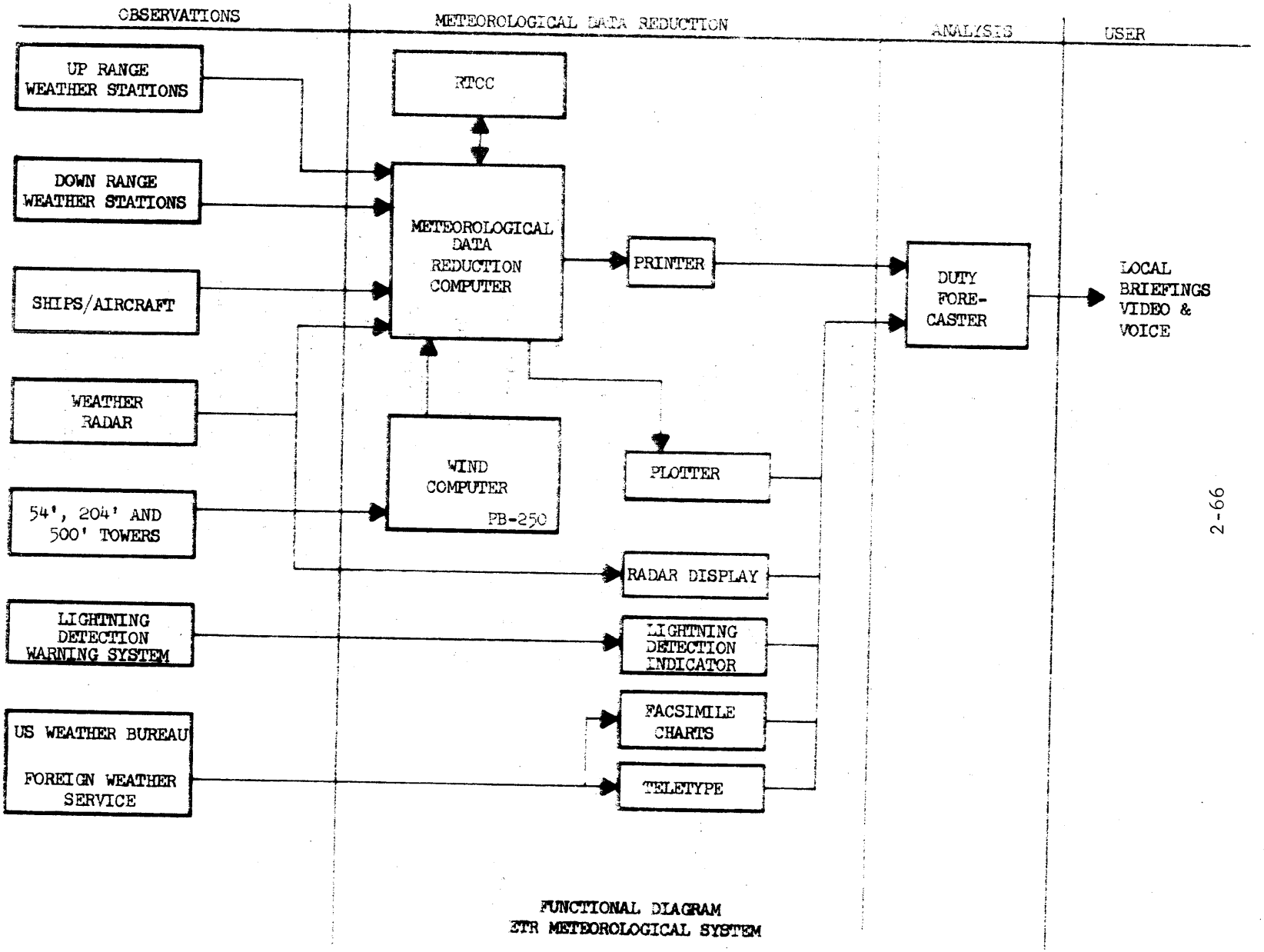

FUNCTIONAL DIAGRAM
ETR METEOROLOGICAL SYSTEM

FIGURE 2.0-24

These subsystems are predominantly composed of standard Air Weather Service meteorological instruments, automatic data processing and data transmission equipment.

2.13.2.3 Surface Observing Subsystem. The present surface observing subsystem, both in the launch area and at down-range stations, consists of standard meteorological equipment. Visual observations of clouds, visibility and weather phenomena are made by a trained weather observer. The Range facilities are being expanded by the addition of substation B and meteorological towers on MILA. The towers will be equipped to provide information to the lightning warning service and to the Wind System.

The Wind system is a flexible data handling system for gathering meteorological information of use in computing the diffusion characteristics of the atmosphere in the launch area. It automatically gathers, processes, records, and displays these data. Sensors on several towers at Cape Kennedy and MILA measure wind direction and speed, air temperature and temperature difference, dew point temperature, and net radiation. The raw meteorological signal information is channeled over telephone lines to a PB 250 computer, and processed. The results are punched on paper tape and printed out for use by the meteorologist. The PB 250 is located in the Meteorological Center.

2.13.2.4 Tropospheric and Stratospheric Measuring Subsystem. Upper air meteorological data can be categorized as tropospheric and lower stratospheric information which affects missile testing significantly. The primary measurements are:

a. Profiles of atmospheric density versus height.

b. Profiles of electromagnetic refractive index.

c. The horizontal wind field and vertical wind shear.

Other upper atmospheric measurements required are temperature versus height; pressure, humidity, water vapor density; and speed of sound.

Rawinsonde systems, including AN/GMD-1A and AN/GMD-2, will take meteorological measurements from the surface to approximately 100,000 feet. The systems are installed in the launch area, at down-range land stations, aboard most of the ORV's and in aircraft.

Reflective RF spheres are used to measure high resolution wind-shear profiles to 60,000 feet. These spheres rise at approximately 1300 feet per minute and drift with the wind.

High-altitude measurements are made to about 400,000 feet in the launch and impact areas by means of rocketsonde systems which use the Arcas and Loki II sounding rockets as payload boosters. Types of commonly used Arcas payloads are the ROBIN and the Arcasonde, which measure temperature, pressure, and density data versus altitude, in addition to wind field measurements. The Loki II, carries chaff payload for tracking by radar to compute the wind field.

Accurate refractive index information is required from ground level to about 100,000 feet to correct raw radar data. The index is obtained two ways:

a. Measurement by Refractometer - Colorado Research Laboratory or other refractometer is used as follows:

(1) Ground level installation.

(2) Aircraft Installation.

b. Calculation From Meteorological Data - Ground level atmospheric pressure, temperature, and humidity measurements are made at regular intervals at range and down-range sites, and transmitted by

teletype or telephone to the meteorological center real-time computer for processing into index of refraction units. Measurements of pressure, temperature, and humidity are also made at 100 ft. altitude increments to 2000 ft. by meteorological ballon and radiosonde systems, and by aircraft flying over the down-range area.

2.13.2.5 Meteorological Centers. The meteorological center at Range Control Center consists of two sections. The forecast and weather briefing section, which is the staff meteorologist's workshop, contains necessary communication equipment to collect test support meteorological data from the Range. Meteorological data will be disseminated from the Center by briefings, voice and data communications. Television briefing equipment will be provided.

The balance of the Meteorological Center will contain the data reduction section which will include a medium capacity computer. The presently used computer is the IBM 1620 data processing system and is used primarily to provide accurate reduction of upper air meteorological data. It consists of three separate units. One unit contains a 1620 computer, core storage, console panel, and typewriter. The second unit is the IBM 1622 card read/punch; the third, the IBM 1623 for extra core storage.

Rawinsonde, wiresonde, meteorological rocket, and double theodolite data are some of the data reduced by the system. A printed copy and a perforated tape are made of the incoming data. The raw data is then converted to IBM cards by means of a tape reader/card punch. The input data cards are computer processed. The resulting output data cards are listed to provide tabular printout of altitude, pressure, temperature, and other meteorological

parameters. Tabular printouts as well as card output decks are given to range users for use in test performance evaluations.

2.14 COMPLEX 39 LAUNCH AREA CAMERA SYSTEM

2.14.1 Function. The Complex 39 Launch Area Camera System provides space vehicle documentary and engineering instrumentation film.

2.14.2 Description. The Complex 39 Launch Area Camera System contains more than 130 motion picture cameras. Generally, the cameras are located in hazardous areas and are operated by remote automatic or manual control. Camera locations include the Mobile Launcher, Launch Pad and six pad perimeter sites.

Three of the pad perimeter sites have tracking camera units. However, the majority of the cameras have a fixed optical axis.

A Camera Control Console and three tracking consoles are located in the CCC. Control, distribution and patch panels are located in the Mobile Launcher and the PTCR.

The total system camera coverage includes:

a. Pre-launch.

b. Launch.

c. Flight up to 1300 ft.

d. Several possible deviations from a normal flight.

2.14.3 Camera Description. The system's cameras include conventional and special cameras in the 16mm, 35mm and 70mm frame sizes. Special cameras have unique features such as: multiple frame rates, high speed shutters, etc. All of the cameras have timing marks registered to one side of the film frame. Focusing will be pre-fixed on the subject matter. Automatic exposure control is also provided for each camera.

Fixed and tracking cameras will be moved to support the active launch pad within the launch complex. The actual camera quantity, type and coverage will vary with the mission requirements.

The following is a partial list of typical fixed camera coverage:

Holddown Arm	Command Module
Tail Service Mast	Spacecraft
Flame Bucket	Documentary
Propellant Loading	Surveillance

A group of pad perimeter fixed cameras are used for overall vehicle surveillance. Commencing at T-17 hours, these cameras will photograph the vehicle and environment at a one frame/second rate.

Tracking cameras primarily provide camera coverage of the space vehicle in flight. A tracking camera unit consists of: transportable tracking mount (Modified Nike Ajax mount), television camera, and four or more film cameras. The television camera (part of the OTV) is connected to a tracking console in the CCC. The console operator will view his TV monitor and with a joystick control position the tracking mount. A tracking camera unit, console and operator is required for each of the three launch perimeter tracking sites.

2.14.4 Camera Control. Two groups of camera turn ON/OFF are used in this system. A group of cameras that are operated solely by manual control and a group that will operate manually and/or automatically.

The manually controlled (ON/OFF) cameras may be operated during any portion(s) of a countdown from the camera control console. For example: the vehicle surveillance cameras.

The manual/automatic controlled cameras have specified conditions for operation. The Camera Control Console will only be able to turn the cameras ON/OFF prior to T-186 sec. After T-186 sec., control is released to the Launch Vehicle Sequencer and cameras will be turned on at a prescribed sequencer time. However, the Control Console has a master turn off control. Master camera turn off may also be initiated by the Launch Vehicle Sequencer.

Manual/automatic cameras are furthermore divided into 20 camera channels. These channels are pre-patched in the ML and PTCR. Prior to T-186 sec. the Control Console may operate (turn ON/OFF) any camera channel(s) as required.

2.14.5 Camera Control Console. The Camera Control Console located in the CCC is the camera system hub. This console contains:

a. Camera status lights.

b. Camera control switches (as described in para. 2.14.4).

c. Frame rate switching.

Status of each camera is displayed by GO, NO-GO, and RUNNING indicators. To indicate a GO condition, the camera must have power, timing, sufficient film for the mission, and shutter/frame rate/light level confidence.

Frame rates for the variable rate cameras are selected from the console. This portion of the system activates a tone generator which, in turn, determines the camera frame rate. The variable rate cameras are divided into ten channels. Each camera channel may be operated on one out of a possible 20 frame rates.

2.15 COMPRESSED AIR SYSTEMS

2.15.1 Function. The Complex 39 Compressed Air System supplies air for the operation of pneumatic operated valves, shop equipment, purging, air start of diesel engines, cleaning and drying, and for soot blowing.

2.15.2 Descriptions. Compressed air is provided from the following locations:

a. Compressed Air Building (Launch Pad).

b. Mobile Servicing Structure.

c. Pad Water Pump Station.

d. Utility Annex (furnishes air to VAB, Utility Annex and LCC).

e. RP-1 Foam Generator at the RP-1 Storage Area.

2.15.2.1 Launch Pad. (Figure 2.0-25) The pad compressed air is provided from the Compressed Air Building. It furnishes clean, dry, compressed air to the ML, while the ML is located at the pad. There are no outlets from the system other than the ML connection.

2.15.2.2 Mobile Launcher Compressed Air System. (Figure 2.0-26) The ML is supplied compressed air from the launch pad interface. Compressed air is used for pneumatic valve control and for facility purposes.

2.15.2.3 Mobile Servicing Structure Compressed Air System. (Figure 2.0-27) The Mobile Servicing Structure Compressed Air System delivers clean, dry air for use as facility air and as an alternate to nitrogen in purging hydraulic reservoirs and electrical enclosures.

2.15.2.4 Pad Water Pump Station Compressed Air System. (Figure 2.0-28) The Pad Water Pump Station Compressed Air System furnishes

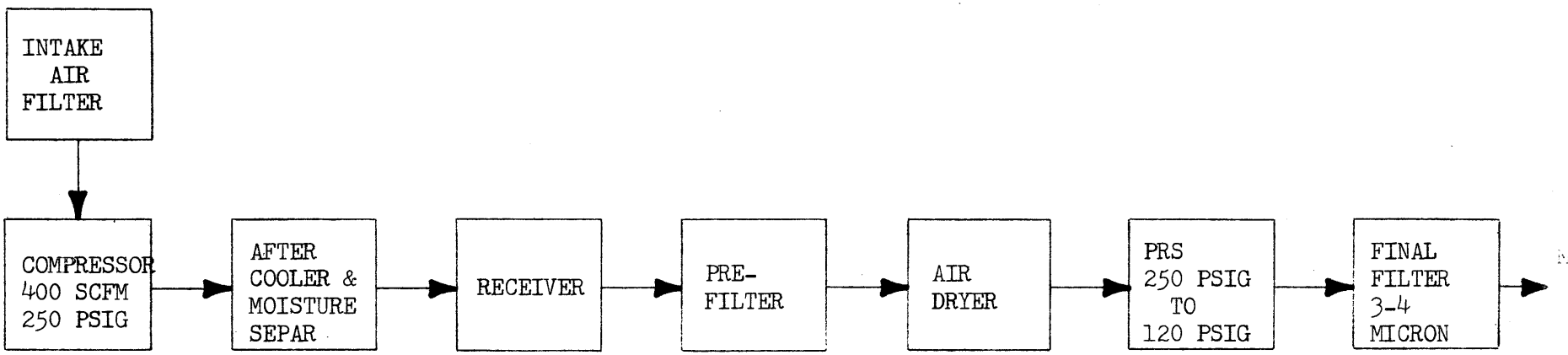

FIGURE 2.0-25 PAD COMPRESSED AIR SYSTEM

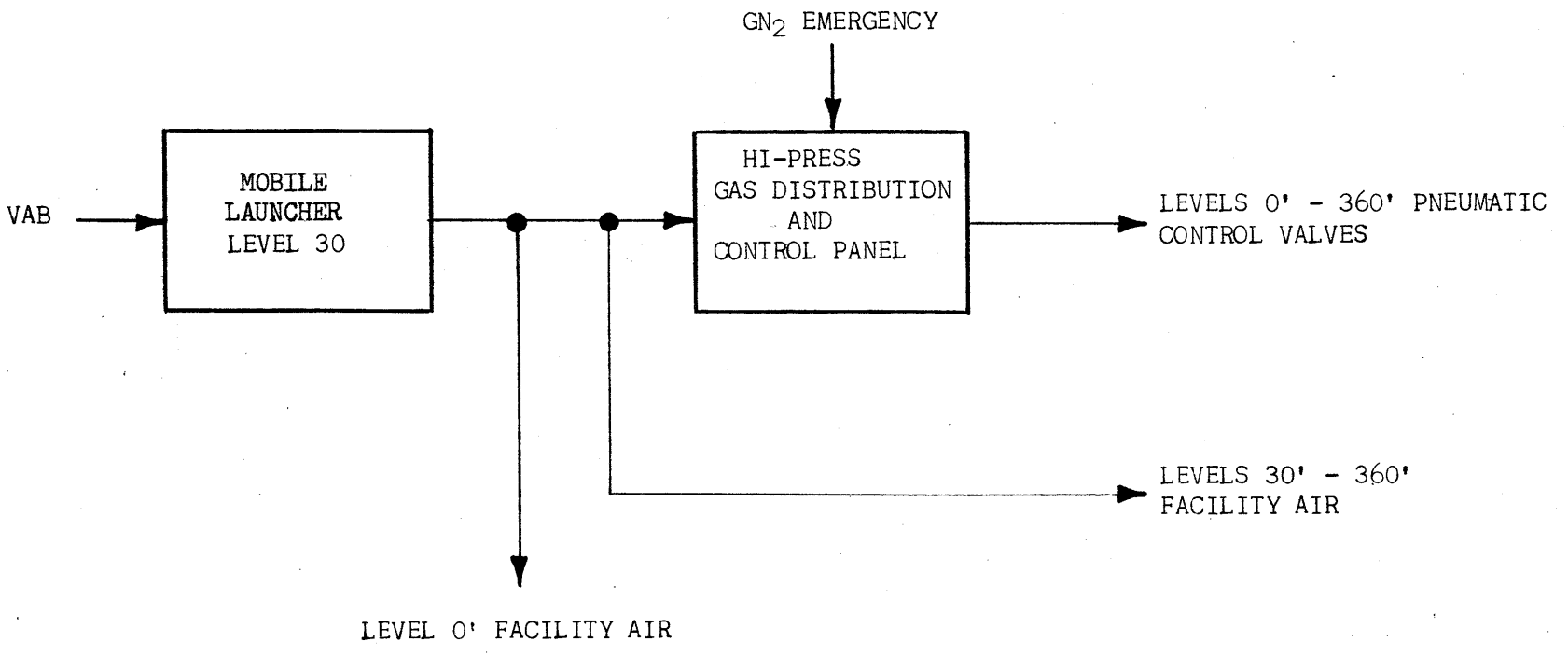

FIGURE 2.0-26 - MOBILE LAUNCHER COMPRESSED AIR SYSTEM

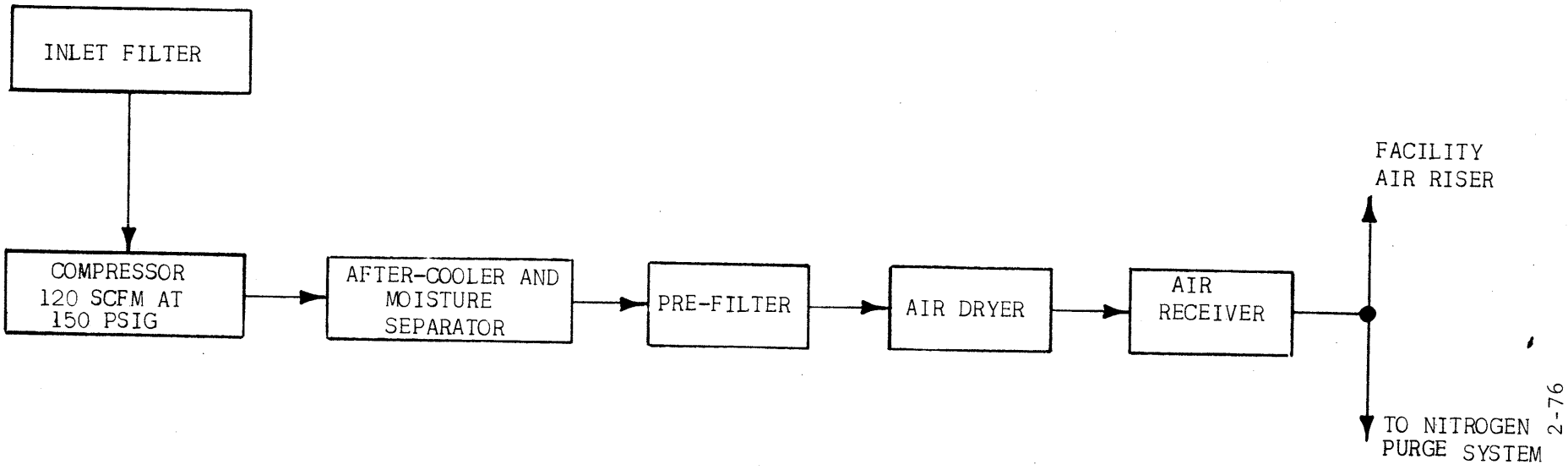

FIGURE 2.0-27 - MOBILE SERVICING STRUCTURE COMPRESSED AIR SYSTEM

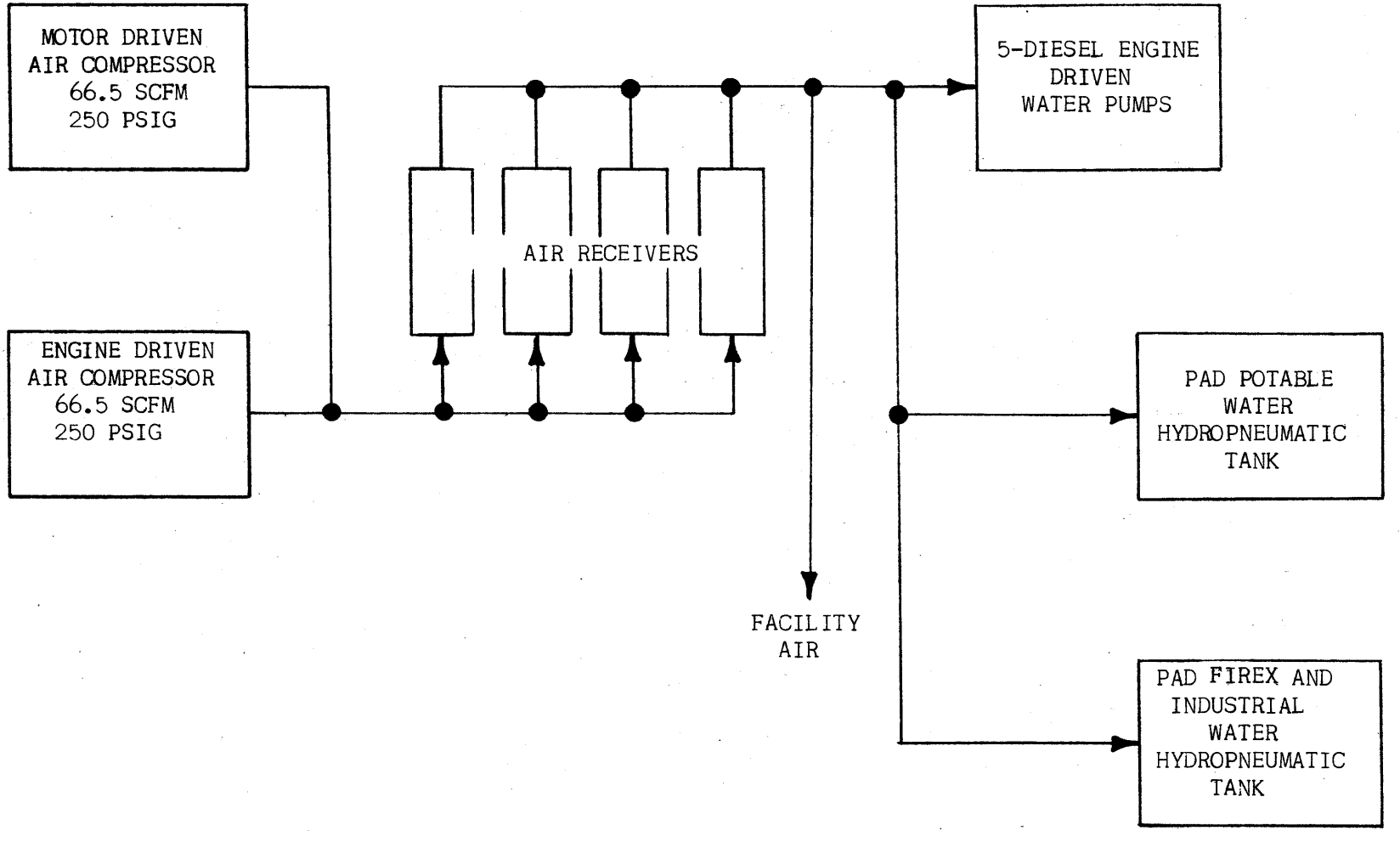

FIGURE 2.0-28 - PAD WATER PUMPING STATION COMPRESSED AIR SYSTEM

air for starting the diesel driven water pumps, for station facility air, for pressurizing the pad fire water and pad firex hydro-pneumatic tank, and for pressurizing the pad potable water hydro-pneumatic tank.

There are two air compressors. One is electric-motor driven and one is diesel-engine driven. They operate at 250 psig. Each is designed to have the capacity to fill four 30-inch diameter by 8-foot high receivers from 180 psig to 250 psig in 15 minutes.

2.15.2.5 Utility Annex. The Utility Annex Compressed Air Systems furnish clean, dry, air to the LCC, VAB and Utility Annex. There are two systems. One is for plant air and the other is for diesel engine starting.

One system furnishes air to the VAB high bay for use on the ML for valve control in gaseous nitrogen and helium pressure reduction stations, for facility air purpose at 125 psig and 40 psig, and for cleaning purposes at 15 psig. (See Figure 2.0-29) Air is used in the low bay for control of nitrogen and helium pressure reduction stations, for facility air at 40 psig, and for cleaning purposes at 15 psig. Air is used in the LCC for facility purposes at 125 psig. Air is used in the Utility Annex for soot blowers. The other system provides compressed air for starting the diesel engine driving the emergency generator and the three fire pumps. (See Figure 2.0-30)

2.15.2.6 RP-1 Foam Generator Compressed Air System. This system consists of a 1/4 HP blower which supplies air for fire fighting foam. The system is located at the Pad RP-1 storage area.

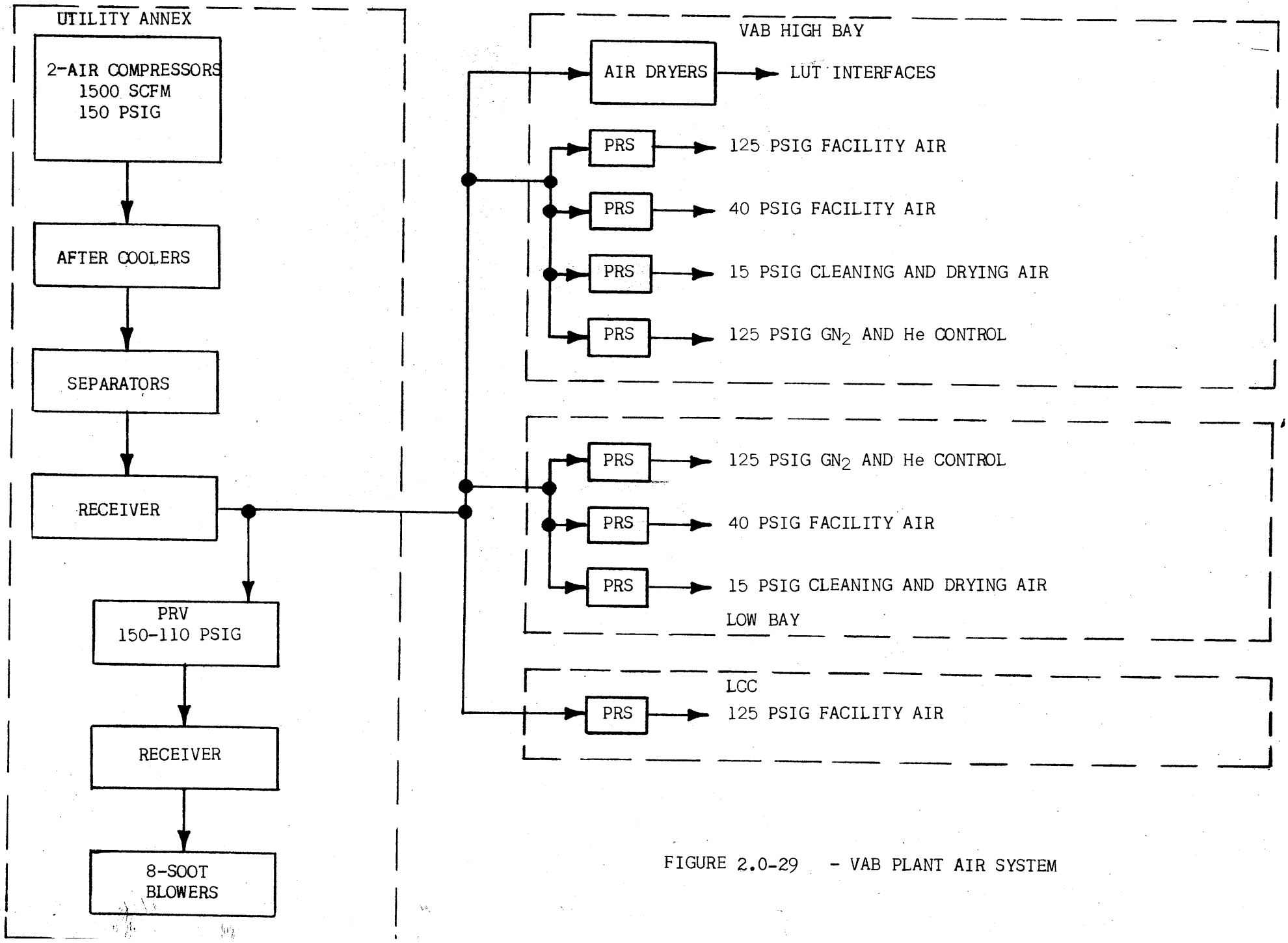

FIGURE 2.0-29 - VAB PLANT AIR SYSTEM

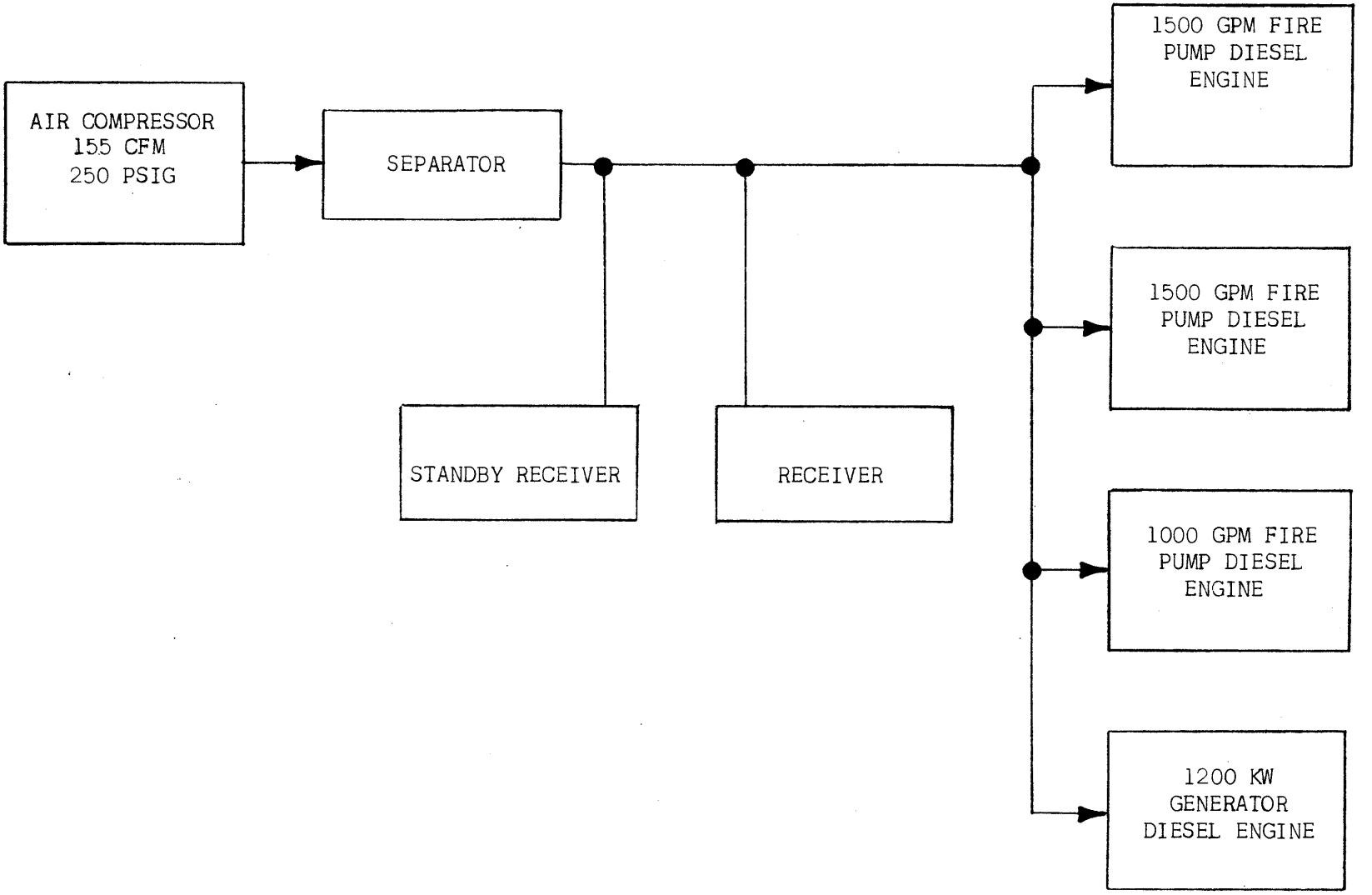

FIGURE 2.0-30 - UTILITY ANNEX DIESEL ENGINE START COMPRESSED AIR SYSTEM

2.16 EMERGENCY INGRESS/EGRESS AND ESCAPE SYSTEM

2.16.1 Function. The Emergency Ingress/Egress and Escape System provides access to and from the Command Module plus an escape route and safe quarters for the astronauts and service personnel in the event of a serious malfunction prior to launch.

2.16.2 General. The Emergency Ingress/Egress and Escape System consists of the Command Module Access Arm, a transition platform, two high speed elevators, pad elevator #2, armored vehicles, the escape tube, and the blast room.

2.16.2.1 Egress to Blast Room

2.16.2.1.1 Command Module Access Arm. The Command Module Access Arm provides a passage for the astronauts and the service personnel to and from the spacecraft at the 320' level of the Mobile Launcher. Once initiated, the action of the arm is automatic throughout the cycle and it is controlled from the firing room.

2.16.2.1.2 High Speed Elevators. Two 600'/minute elevators permit travel from the 340' level of the Mobile Launcher to level "A". Each elevator has 2500 pound capacity. No remote controls are provided; however, continuous indication is displayed in the Complex Control Center showing that the elevators are descending from the time they leave level 340' until they reach level "A".

2.16.2.1.3 Escape Tube. The escape tube permits personnel, who have insufficient time due to the state of the emergency, to retreat from the area via pad elevator #2, to escape hazardous conditions by sliding down into the blast room vestibule. The tube consists of a short section which extends from the elevator vestibule and interfaces with a fixed

portion that penetrates the pad at an elevation of 48 feet. At the lower extremity of the escape tube, a deceleration ramp is provided which will slow the exit velocity enough to permit safe exit for the user. The tube is lighted throughout at regular intervals.

2.16.2.1.4 Blast Room. Entrance to the blast room is gained through blast-proof doors which can be controlled from either side. The floor of the blast room is mounted on coil springs allowing personnel to withstand outside acceleration force of 3 to 56 g's. Accomodations are provided for twenty people for a twenty-four hour stay. Provision is made to decrease the velocity of the air moving in the air ducts outside the blast room, thereby providing two escape routes through the ducts. Further retreat procedures will be specified at a later time by the Emergency Egress Committee. Communication facilities are provided in the room including an emergency RF link in which the receiving antenna is built into the ceiling. In the event that escape via the blast proof doors is negated a hatch is provided in the top of the blast room for access by rescue crews.

2.16.2.2 Egress via Pad Elevator #2

2.16.2.2.1 From the ML elevator vestibule egressing personnel will proceed along the corridor to pad elevator #2. The elevator must be left at level "A" to provide rapid access to the pad level.

2.16.2.2.2 Armored Vehicles. Armored vehicles and/or personnel carriers will be available at the pad adjacent to pad elevator #2, at the remote air intake facility, and at the PTCR exit. Routing of the retreat is determined by the specific emergency and this will be determined by the Emergency Egress Committee at a later date.

2.17 PROPELLANT SYSTEMS

2.17.1 Function. The propellant systems receives, stores, transfers, controls and monitors all RP-1, LH_2 and LOX used as launch vehicle propellants.

2.17.2 Description. The systems consist of the RP-1 system, LH_2 system, LOX system.

2.17.2.1 RP-1 System. The RP-1 is delivered to LC39 by tank trailers. It is then stored in three 86,000 gallon tanks. The RP-1 is unloaded from the trailers by the 1000 gpm - 75 psig filter pump. This pump is also used to circulate and filter the RP-1 for removal of contaminants. The RP-1 is transferred from the storage tanks to the vehicle by the 2000 gpm-178 psig transfer pump, through the cross-country 8-inch welded stainless steel line.

A circulating line connects the discharge of the transfer pump to the storage tank.

To drain the launch vehicle tanks and lines a jet eductor is located in a line from the main fill to the storage tank.

2.17.2.2 LH_2 System. The liquid hydrogen is delivered to LC39 by dewar trailers. It is stored in a double walled, insulated dewar, having a working capacity of 850,000 gallons. A vaporizer is used to pressurize the tank to 75 psig. The liquid hydrogen is transferred from the storage tank to the vehicle through a 10-inch jacketed line. The tank pressure is used to transfer the hydrogen from the tank to the vehicle. Maximum flow rate is 10,000 gpm.

2.17.2.3 LOX System. Liquid oxygen is delivered to LC39 by dewar trailer. It is stored in a double walled insulated dewar having a

working capacity of 900,000 gallons. A vaporizer is used to pressurize the tank to 10 psig.

The liquid oxygen is transferred to the vehicle through a 14-inch line for main fill and a 6-inch line for replenish. A 10,000 gpm - 320 psig pump is used for main fill transfer. A 1,000 gpm - 310 psig pump is used for replenishment.

2.17.2.4 Propellant Tanking Computer System. The PTCS located on the ML and in the LCC controls and monitors the tanking of the launch vehicle. This is accomplished in accordance with a predetermined program. The operation is fully automatic. Override controls are provided for manual takeover.

2.17.2.5 Data Transmission System. The DTS receives, multiplexes, and transmits control signals and status information between the LCC and the propellant systems at the pad.

2.18 CENTRAL COMPUTER COMPLEX

2.18.1 Function. The Central Computer Complex, within the CIF, houses GE-635 large-scale computing systems with associated high-speed plotters, magnetic-tape data transmission equipment, and computer peripheral equipment.

The CIF computing systems perform the following centralized computation and "quick-look" data reduction:

a. Prelaunch Data Processing. This includes such tasks as wind-shear analyses, determination of antenna pointing angles, and prediction of sound focusing phenomena.

b. Scientific Planning and Analysis. Computations, such as geometric dilution of precision (GDOP) for tracking systems and line-of-sight checks for instrumentation sites, are performed.

c. Prelaunch Simulation and Subsystem Evaluation. The CIF computing system is used in preflight simulation and subsystem evaluation by monitoring telemetry system performance, verifying measurement limits, and predetermined calibration curves.

d. Real-Time Digital Data Monitoring. The computers can monitor 3,000 telemetry measurements, convert them to engineering units, store the converted data for the last 1,000 seconds, and provide converted data upon request to a real-time data display system operated by the CIF Telemetry Station.

e. Post-Launch "Quick-Look" Data Processing. "Quick-Look" data are available on microfilm as well as in the form of tabular copies and X-Y plots of engineering units versus time for all measurements. Prelaunch test support includes computations for evaluation of the performance of the onboard digital guidance computer and altimeter.

f. Digital Long-Distance Data Transmission and Reception. Tape-to-tape and tape-to-card digital data transmittal equipment is available at KSC.

2.18.2 Description. Figure 2.0-31 is an equipment block diagram showing the relationship of the devices that collectively make up the Central Computer Complex. This complex is capable of real-time capture and display of telemetry data, general purpose data reduction, scientific computation and digital long-distance data transmission and reception.

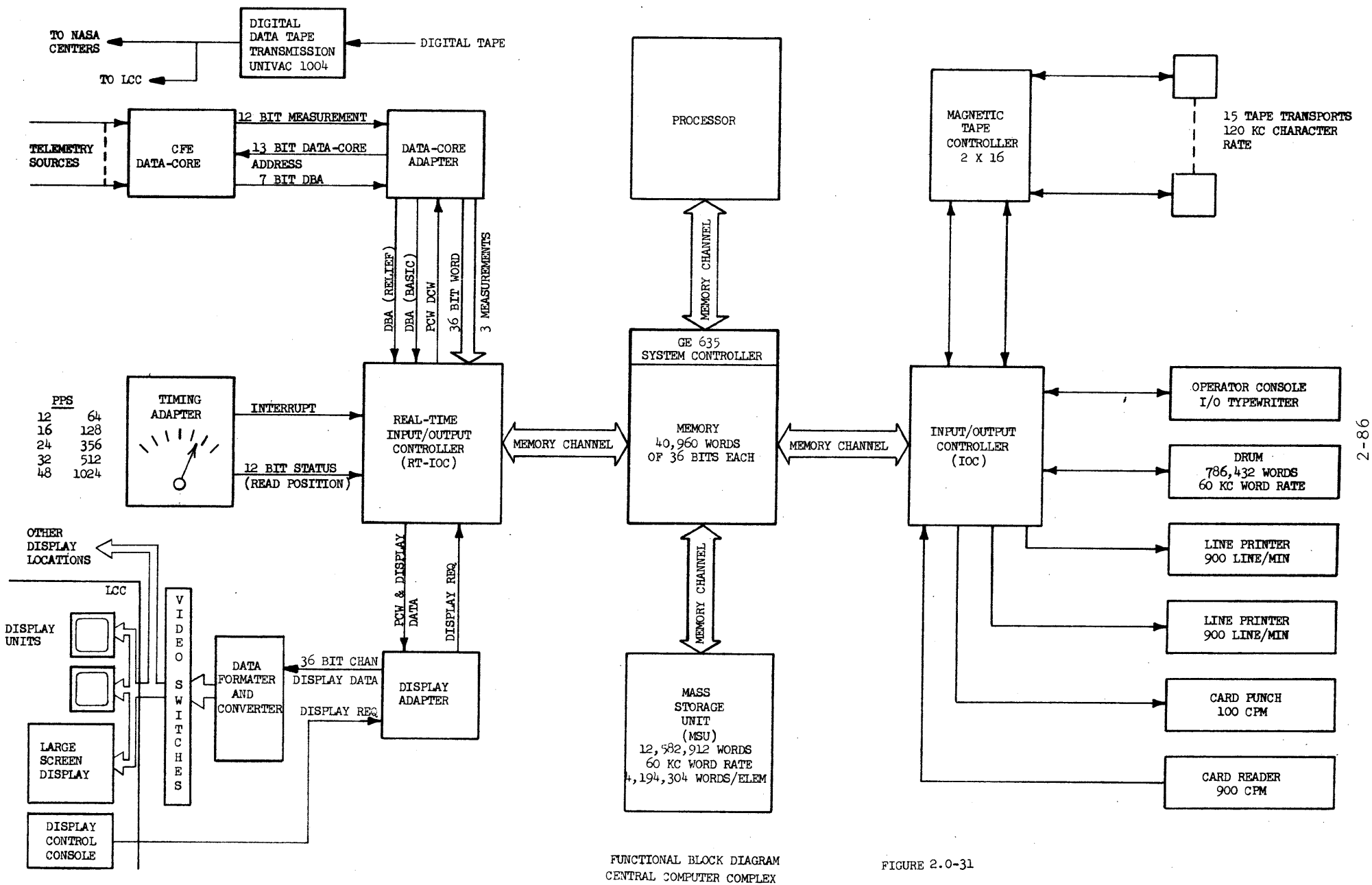

FUNCTIONAL BLOCK DIAGRAM
CENTRAL COMPUTER COMPLEX

FIGURE 2.0-31

The GE 635 computer is completely modular in construction. It consists of four major modules: the memory, the processor, and two types of input-output controllers. Real time telemetry display is accomplished by the real time input-output controller, Datakor adapter, Display adapter, and the Mass Storage Drum File. The entire system, including the real time functions, is under the control of the General Comprehensive Operating Supervisor (GECOS). The GECOS provides multiprogramming and multiprocessing capability and ensures efficient scheduling of the use of all equipment. See Table I for a listing of the equipment and software elements.

Programs for real-time missions include the following independent programs that operate on a multilevel basis:

a. Datakor input program.

b. Magnetic tape recording program.

c. Drum data recording program.

d. Drum data retrieval program.

e. Display request program.

f. Display data conversion program.

g. Display data transmission program.

2.19 DATA DISPLAY SYSTEM

2.19.1 Function. The Real-Time Data Display System will format and display computer processed telemetry and radar information for use during launch and flight operations. The system will also display weather information, Flight TV and preflight data profiles. Displays will be located in the LCC and as required in other areas.

2.19.2 Description. The data flow diagram for the Data Display System is described with reference to Figure 2.0-32 as follows: Computer

TABLE 1. Elements of the General-Purpose and Real-Time Computer System

Element	Quantity	Features
GE-635 Processor	2	1. Fixed and floating-point arithmetic - single - and double-precision: Fixed-point add or subtract: 1.8 microseconds Fixed-point multiply: 7.0 microseconds Fixed-point divide: 14.2 microseconds Floating-point add or subtract: 2.7 microseconds Floating-point multiply: 5.9 microseconds Floating point divide: 14.2 microseconds 2. 18-, 12- and 6-bit zone manipulation 3. Character handling modifiers 4. Multiprogramming capability
GE-635 Memory	2	1. Word size: 36 bits plus parity 2. Core size: 32,768 words for applications plus 8,192 words for executive program 3. Access time: 1.0 microsecond for two words 4. Effective cycle time: 700 nanoseconds

Element	Quantity	Features
		5. Real-time priority interrupt capability
Standard Input-Output controller	2	Eight peripheral channels, of which three are high-speed (4,000,000 6-bit characters per second), and five are standard speed (25,000 6-bit characters per second).
GE-635 console with input-output typewriter	1	Input-output typewriter, status lights.
Magnetic tape controller	1	Dual crossbar channels, can control as many as 16 tape units
Magnetic tape transport	15	Transfer rate of 120,000 6-bit characters per second, compatible with IBM 729 Mod VI
Line Printer	2	Each prints 900 lines per minute; combined rate is 1,800 lines per minute.
Card reader	1	1. Reads 900 cards per minute. 2. Extensive checking features.
Card punch	1	1. Punches 100 cards per minute. 2. Extensive checking features.
Standard magnetic drum storage unit	1	1. Capacity: 786,432 computer words 2. Average access time: 17 milliseconds 3. Transfer rate: 61,667 words per second
Mass-storage drum file (MSDF)		1. Fixed heads 2. Storage capacity: 452,984,832 data bits 3. Transfer rate: 2,211,840 bits per second (average) 4. Contains 3 drums, expandable to 4 5. Average latency: 8.4 milliseconds

Element	Quantity	Features
		6. 36,864 data bits per track
Real-time input-output controller (RT-IOC)	1	Access rate to memory: 500,000 36-bit words per second.
Datakor adapter	1	1. High-performance interface between Datakor and computing system 2. Transfer rate is 250,000 data words per second
Display adapter	1	1. High-performance interface between data display and computing system 2. Expandable to over 200 displays
Motor-generator set and power sequencer	1	62.6kva power source
	SOFTWARE ELEMENTS	
System executive (GECOS)		1. Schedules and controls all programs and equipment for maximum efficiency. 2. Provides full multiprogramming capability
Utility programs and subroutines		A comprehensive set (See Description)
Compilers		FORTRAN IV extended, FORTRAN II to FORTRAN IV conversion, COBOL 61
Assembler		Macro-assembler

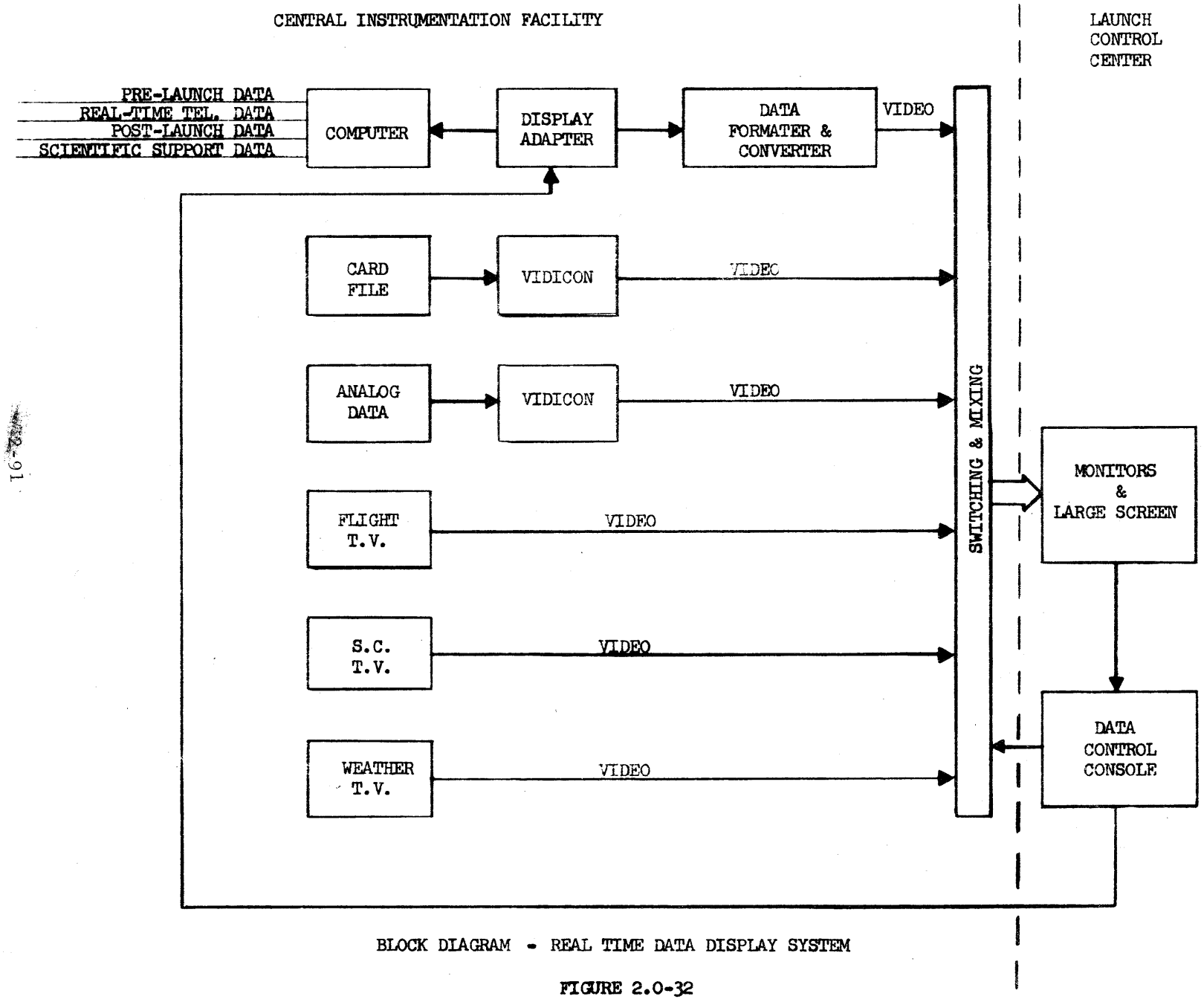

BLOCK DIAGRAM - REAL TIME DATA DISPLAY SYSTEM

FIGURE 2.0-32

output data is fed into a "Buffer/Distributor" where the data are channeled to the proper display. Then the data are converted by the "Data Formator and Converter" into a video format. The converter stores the data at a 30 frame per second TV rate, thus alleviating the computer workload. Graphs, maps, and charts are stored on 35mm slides and then converted to video by a TV camera. Other forms of data are converted by TV cameras or are already in video format and can be interleaved directly into the system. The video data are then displayed on TV monitors at consoles or projected onto large screen displays. Controls at the consoles allow the operator to select and expand the data displayed on the monitors as required. A maximum of 64 displays can be driven by this system.

The equipment for converting the data into video format and for video switching is located in the CIF. Data display monitors, display control consoles and large screen rear projection displays are located in the firing rooms within the LCC. Four large screen rear projection displays are used in each firing room to support display requirements.

The CIF will also be the center for terminal equipment to provide transmission of real-time display information to MSFC, MSC and other Data Receivers within KSC.

2.20 GROUND TELEMETRY SYSTEM

2.20.1 Function. The CIF Telemetry Station will process telemetry data from prelaunch tests and flight of NASA vehicles. The telemetry system will provide the following services: acquisition and recording of telemetry data; analog recording of processed telemetry data; real-time digitizing and selection of telemetry data for reduction on general-purpose

computers; digitizing, formating, and selection of telemetry data for real-time digital transmission to NASA centers or other data users; and generation of computer-compatible digital tapes of telemetry data for computer reduction.

2.20.2 Description. The telemetry system equipment (Figure 2.0-33) will be located at the CIF Antenna Field and at the telemetry station on the second floor of the CIF. The CIF antenna site is located in the RF quiet zone and will have antennas for receiving in-flight telemetry data. These data will be transmitted to the CIF via wideband cable as well as AFETR data from Tel IV. The CIF telemetry station will be composed of several modules which can be operated together or independently. These modules will be used for real-time support of launch and simulated flight tests, for support of nonflight systems tests, and for supplying telemetry data input to transmission equipment. Each module consists of 72 equipment racks and incorporates advanced techniques of telemetry processing such as diversity combining of received signals, predetection recording, and real-time conversion of data to digital format.

The real-time digitizing of telemetry data utilizes the DATA-CORE System shown in Figure 2.0-34 and is described as follows:

DATA-CORE is an electronic system which will receive a variety of types of analog and digital input data from a multiple number of asnychronous sources and will process these data into digital format that can be utilized directly by a high-speed digital computer and quick-look digital or analog display devices. The DATA-CORE is composed of four major subsystems: input data converters, digital scanner, computer interface, and data display distributor.

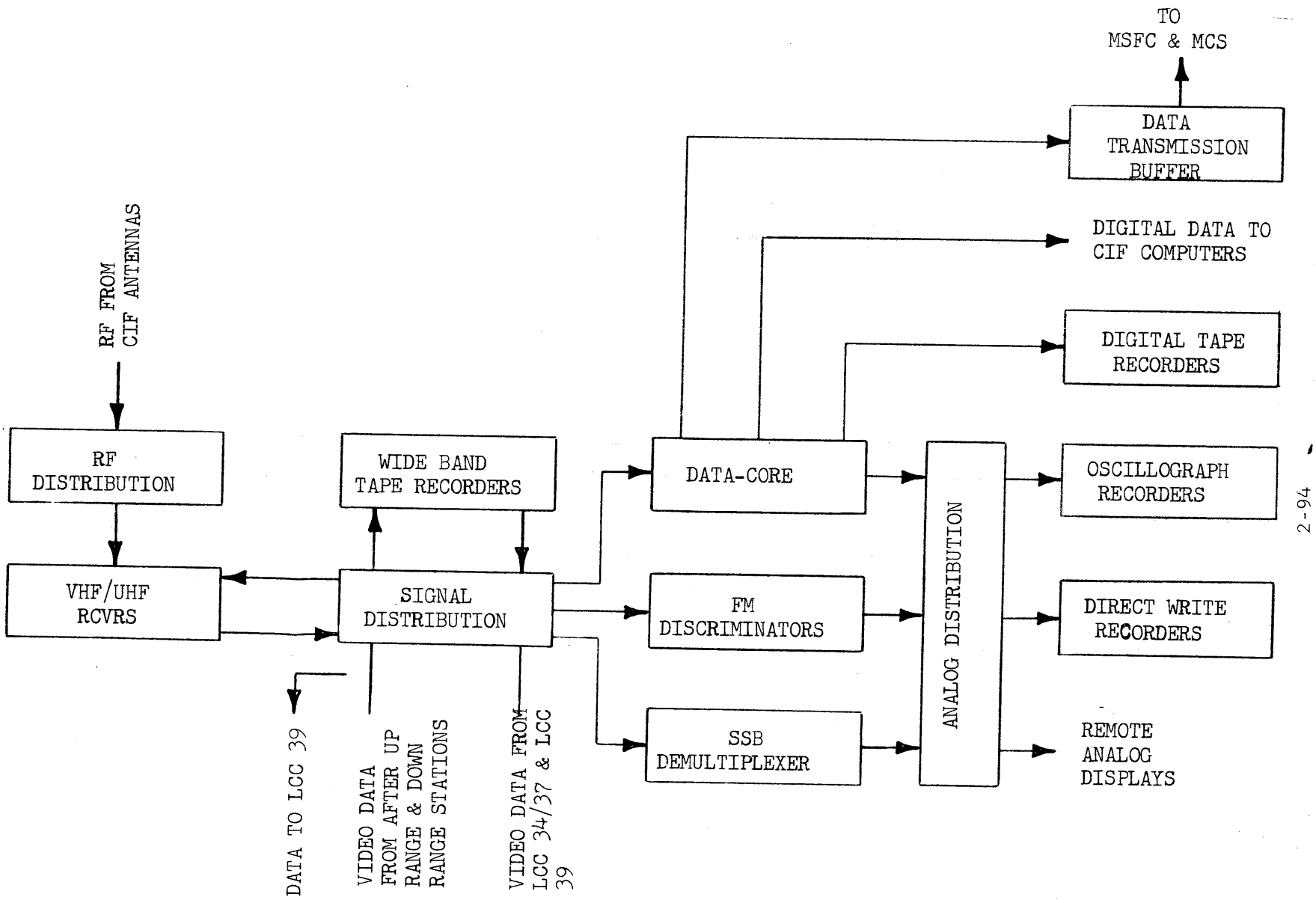

BLOCK DIAGRAM
ONE MODULE IN CIF TELEMETRY STATION

FIGURE 2.0-33

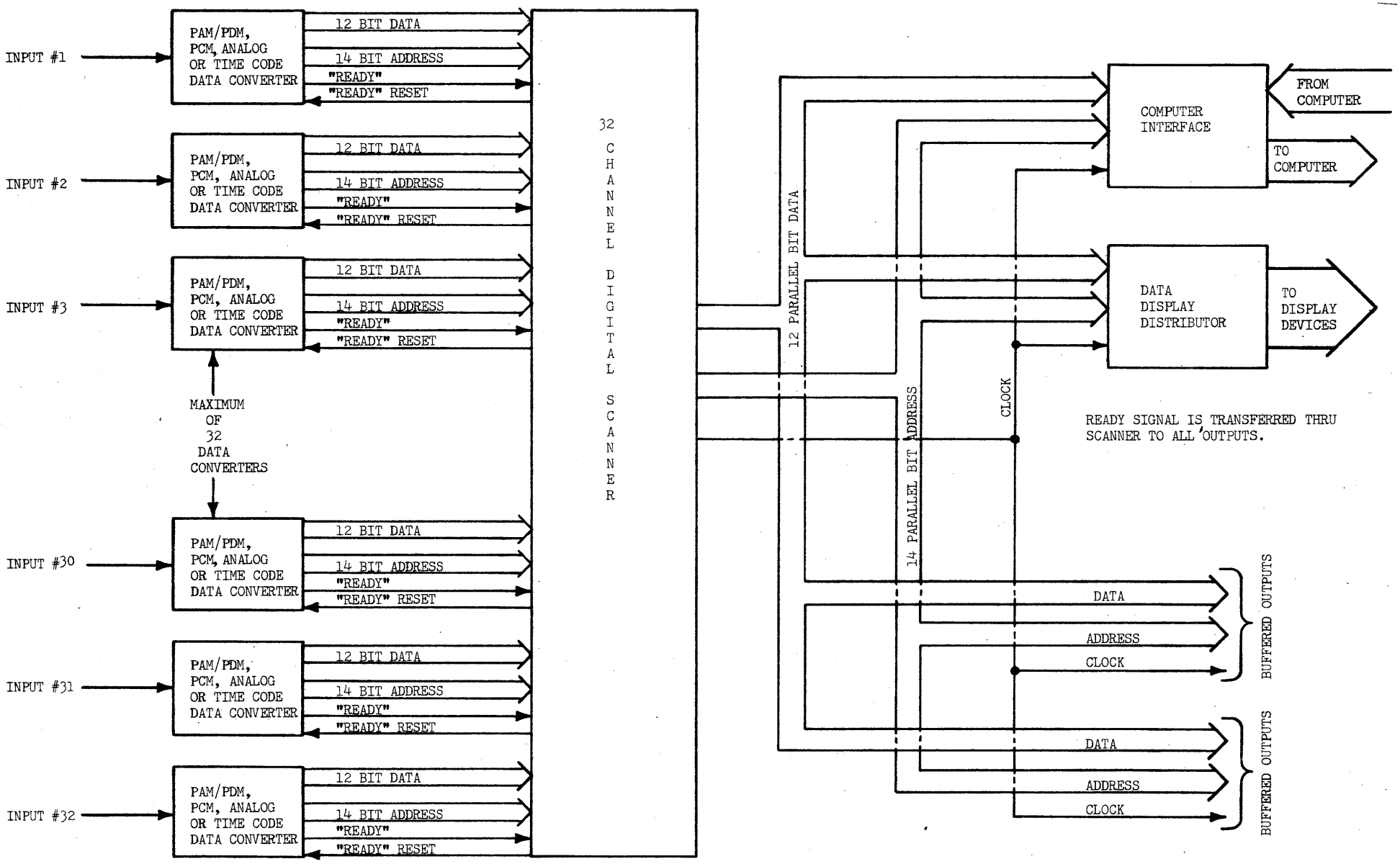

BLOCK DIAGRAM OF DATA-CORE

FIGURE 2.0-34

The PCM input data converter consists of the bit rate synchronizer, code synchronizer, serial-to-parallel converter, and PCM addressor.

The bit rate synchronizer will operate with any frequency between 10 and 600,000 bits per second with an NRZ (nonreturn to zero) code and 5 to 300,000 bits per second for RZ (return to zero) code. It can establish clock timing synchronization with the incoming serial wavetrain and also filter the incoming signal to improve the signal-to-noise ratio. The input wavetrain will then be regenerated into a noise-free constant amplitude, serial output wavetrain.

The code synchronizer will process the regenerated serial wavetrain from bit rate synchronizer and establish timing synchronization of the internal programs with the information contained within the coded words of the wavetrain. It will have three independent 32-bit synchronization code pattern recognizers.

The serial-to-parallel converter breaks the serial data train into meaningful digital words and presents these as parallel data words to the digital scanner. The converter will utilize the timing furnished by the code synchronizer to perform this conversion to parallel.

The PCM addressor will utilize the timing and other information from the code synchronizer to look up in a core memory programmed and stored address codes to be presented to the digital scanner along with data words from the serial-to-parallel converter. The addressor will give the "Ready" signal to permit the digital scanner to transfer the data and address words to its outputs. It will be capable of generating data addresses for input data rates up to

60,000 per second. The core memory will be capable of storing from 0 to 4096 address or instruction words which are each 14 bits in length. The clear-write or read-restore cycle time of the memory will be 5 microseconds or less.

2.21 MILA TIMING AND LAUNCH COUNTDOWN SYSTEMS

2.21.1 Function. The MILA Timing Systems are designed to perform the following specific tasks:

a. Provide an extremely accurate and stable source of timing signals at rates and in formats consistent with the needs of instrumentation, monitor, display, and analysis equipment.

b. Maintain time synchronization with universal primary standards and the Eastern Test Range.

c. Provide precision discrete frequency signals referenced to universal primary standards.

d. Distribute timing and frequency signals to all NASA/KSC and MSC activities within MILA.

e. Generate, distribute, and display countdown timing signals from launch, checkout, or computer-controlled tests.

2.21.2 Systems Description. MILA Timing Systems consist of equipment installed at the Central Instrumentation Facility (Central Timing Station), Figure 2.0-35, and remote locations. These sites include the Launch Control Center (LCC), Vertical Assembly Building (VAB), Pad Terminal Connection Room (PTCR), Mobile Launcher (ML), Operations and Checkout Building (O&C) and the spacecraft fluid test area.

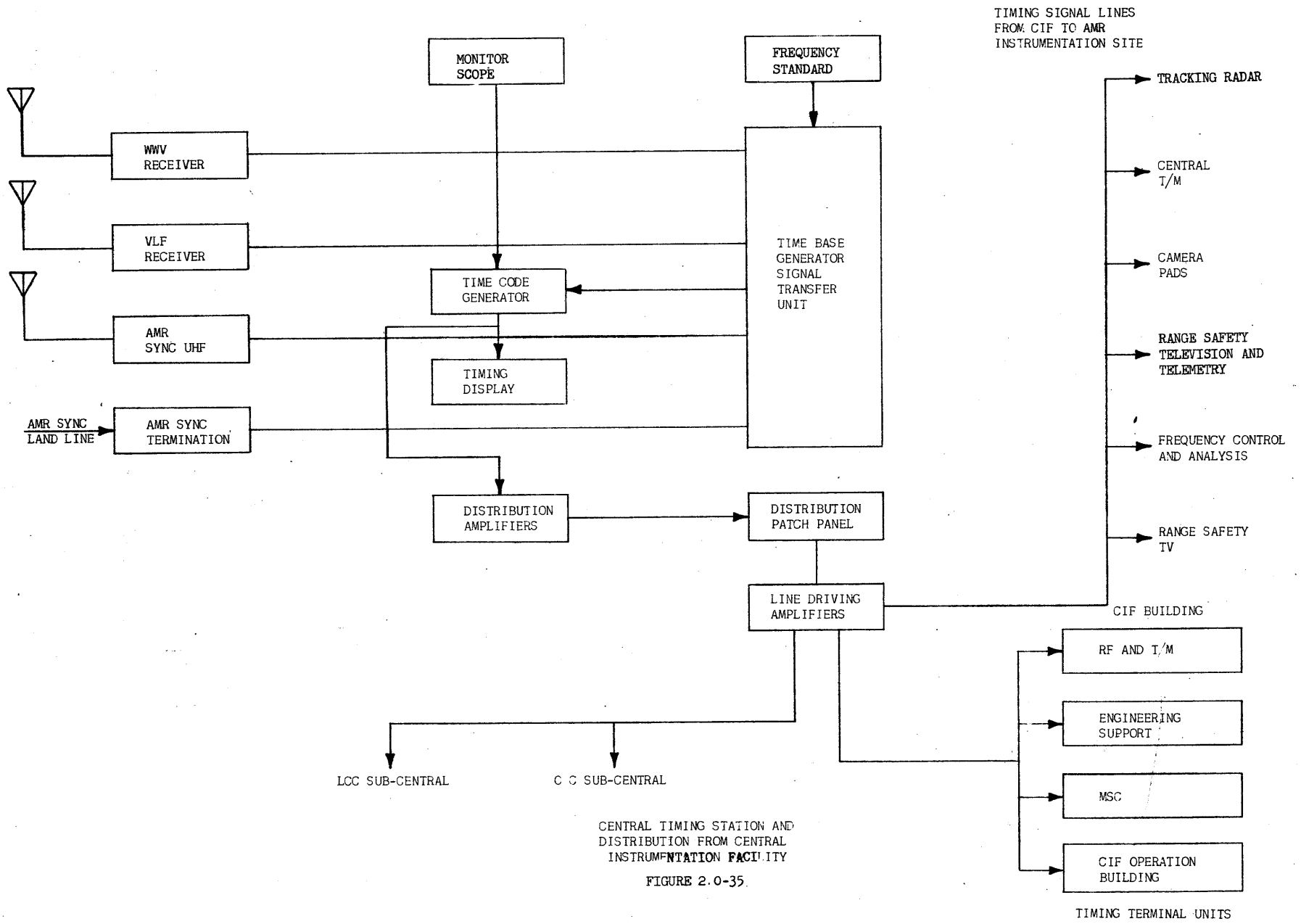

CENTRAL TIMING STATION AND DISTRIBUTION FROM CENTRAL INSTRUMENTATION FACILITY

FIGURE 2.0-35

The Central Timing Station contains equipment to generate and accumulate accurate time and frequency signals distributed via high-quality wire lines to all location.

Each of the two identical sets of equipment at Central Timing consists of a standard reference oscillator, a time base generator, code generators, and timing signal distributors. This duplication provides a standby unit in case of failure, and insures high accuracy by comparing the output of the two sets of equipment.

Accuracy of time and frequency signals is continuously compared with signals received from standard radio transmissions to verify that accuracy is within specifications.

NASA/KSC timing signals must be synchronized with present and future ETR-operated timing distribution. This is made possible by wire interface at the Banana River Repeater Station and by reception of the Ultra High Frequency (UHF) Range Time Transmission. The ETR UHF transmission will be the source of timing signals for all contractor-operated far-field range instrumentation activities.

Timing signal distribution is facilitated by cable between major MILA locations. This cable minimizes interferences and improves mechanical integrity.

Timing terminal units are supplied to the rack-mounted equipment areas of the using activity from which the individual instrumentation media are energized. Modular design is used to facilitate expected expansion.

The operation and maintenance of the timing equipment on MILA is a sole NASA or a contractor designee responsibility. All CIF activities will be served by direct wire line from Central Timing. For other distribution see Figures 2.0-36 and 2.0-37.

All correlation timing signals are provided at rates and in formats for that particular requirement of each user. The user will be required to coordinate NASA Form KSC 22-19 with the timing office to obtain the hardline signals. The signal requirements will have to be resolved on a technical level between NASA MILA Timing Systems and the user.

2.22 LAUNCH ENVIRONMENTAL MEASURING SYSTEM

2.22.1 Function. The environmental measuring systems at Complex 39 monitor in real time and record for later analysis a wide variety of environmental measurement data associated with the mating, transportation, checkout, and launch of the Apollo/Saturn V vehicle.

2.22.2 Description. Five systems collectively make up Launch Environmental Measuring. They are:

a. Digital Data Recording System.

b. Vibration Data Recording System.

c. Acoustics System.

d. Safety Monitoring System.

e. Transportable Measuring System.

The above systems are described separately for classification.

2.22.2.1 Digital Data Recording System. The Digital Data Recording System at Launch Complex 39 is capable of 600 simultaneous measurements, combined at each ML and pad. It is further capable of expanding the number of measurements up to 500 channels at either the ML or the Pad

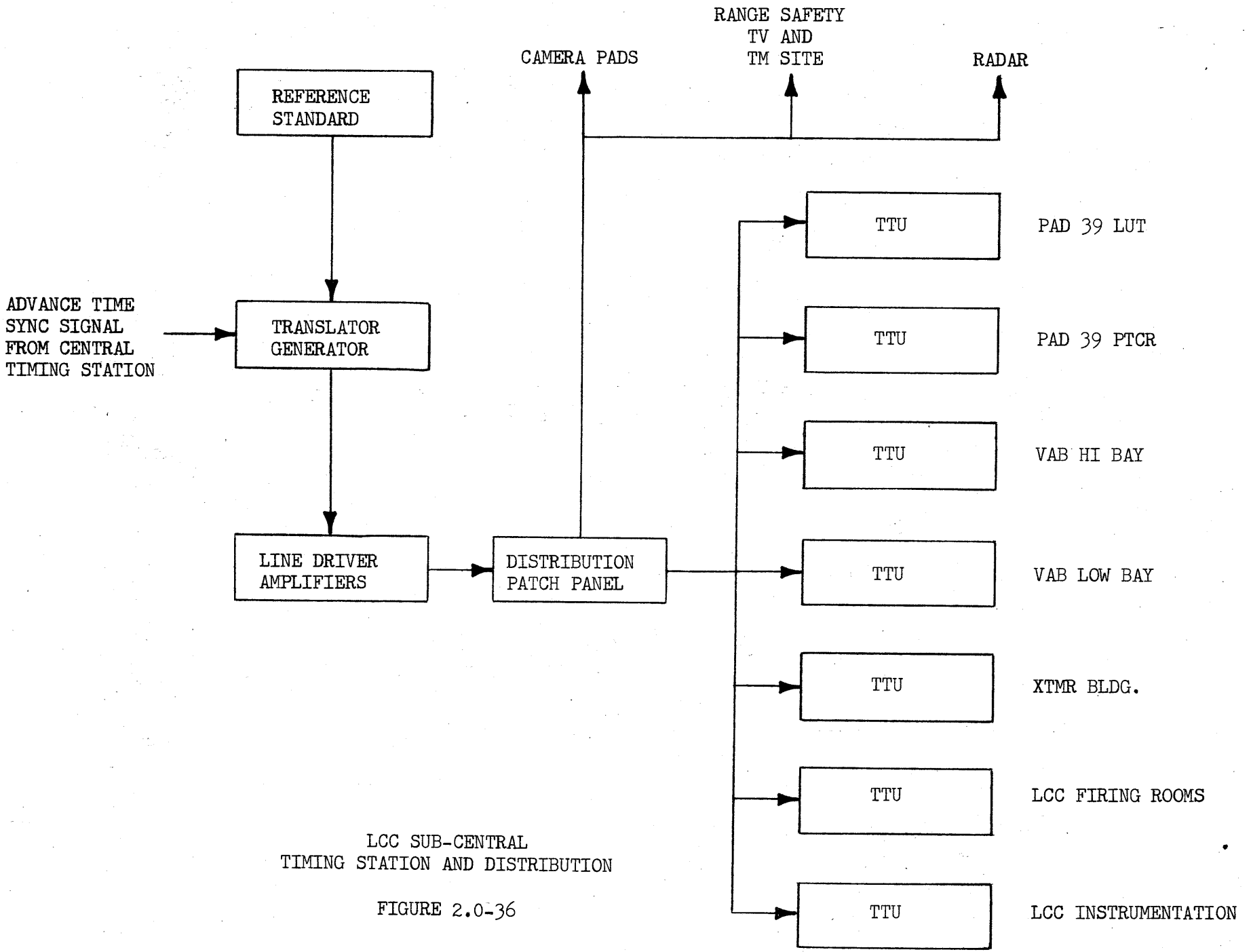

LCC SUB-CENTRAL
TIMING STATION AND DISTRIBUTION

FIGURE 2.0-36

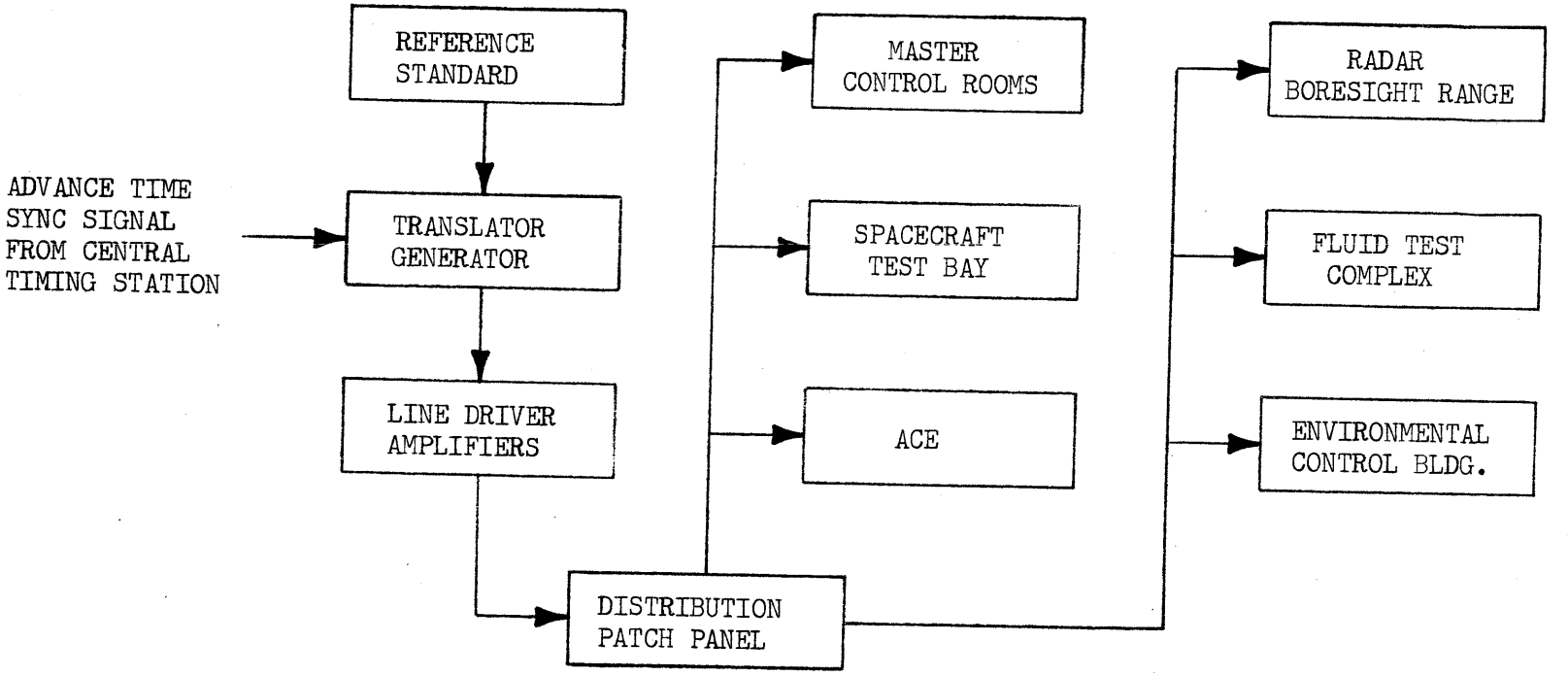

MANNED SPACECRAFT OPERATIONS BUILDING
SUB-CENTRAL TIMING STATION
AND DISTRIBUTION

FIGURE 2.0-37

Terminal Connection Room (PTCR). These channels are interchangeable in groups of 100. See Figure 2.0-38.

The use of versatile signal conditioning and multiplexing units permits many types of measurements, such as: Pressure, temperature, strain, rate of flow, rpm, liquid level, displacement, hydrocarbon content, moisture content, relative humidity, voltage, current, and frequency. To simplify maintenance and for versatility, plug-in modules are used throughout the system.

The data system includes a five-step calibrator, which applies precision voltages in five steps to any or all channels simultaneously in order to set up the channels, and a performance analyzer, which automatically verifies the performance of the data system. These two units can be operated either manually or automatically, and either locally or remotely from the LCC.

All low-frequency analog data signals are conditioned by the system which converts analog data signals to digital data signals, records data in digital computer format on magnetic tape, and transmits the data to the LCC for a real-time display.

2.22.2.2 Vibration Data Recording System. The Complex 39 Vibration Data Recording System has the capability of recording a total of 336 data measurements per launch, 228 of which are located in the ML and 48 of which are located in the Pad Terminal Connection Room (PTCR). This system includes vibration detection, signal conditioning, amplification, voltage to frequency conversion, F.M. multiplexing, recording, and frequency to voltage conversion. It is self-calibrating and contains confidence monitors and an individual channel identification system. The vibration

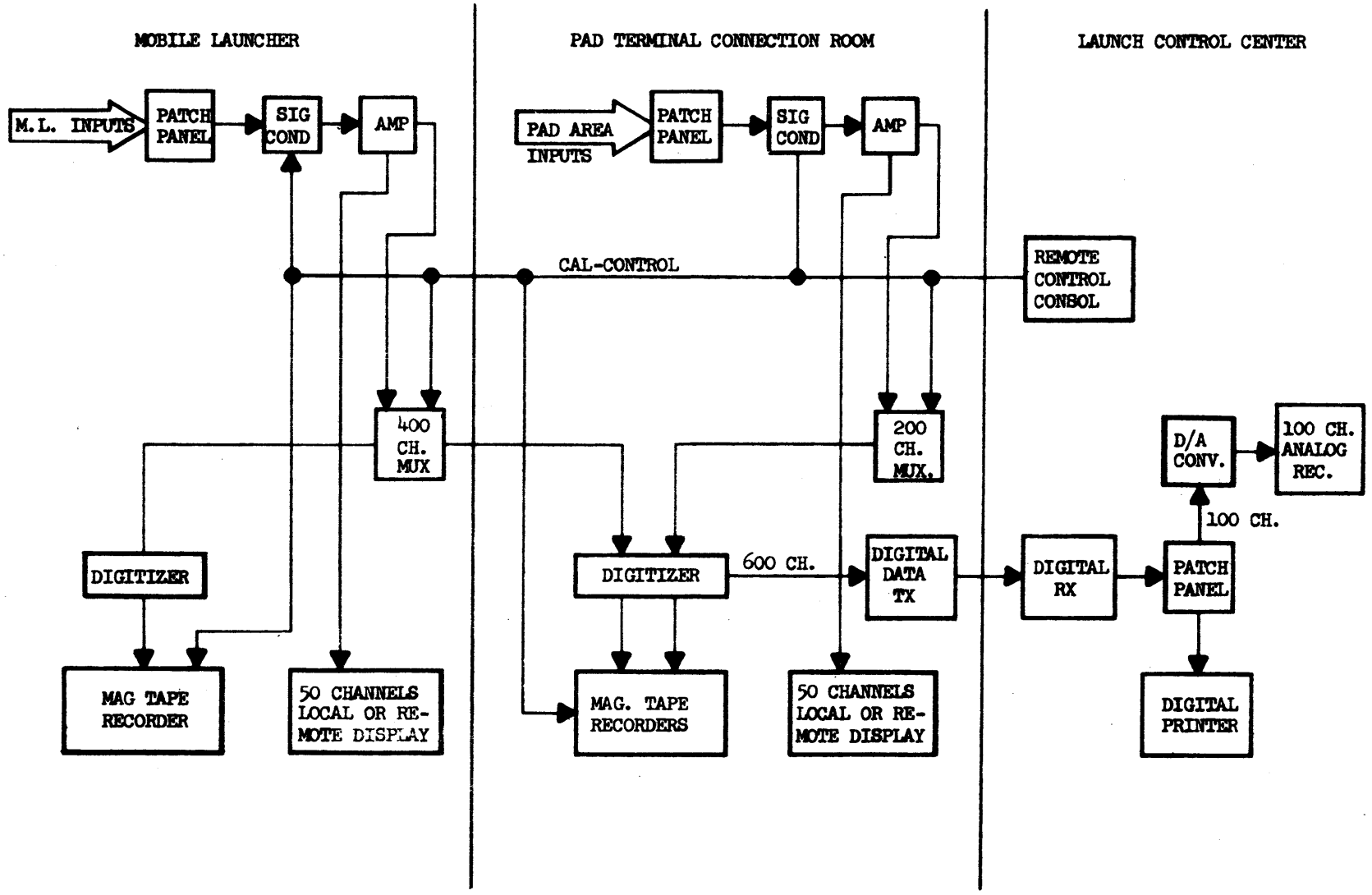

COMPLEX 39 DIGITAL DATA RECORDING SYSTEM

FIGURE 2.0-38

system is sufficiently stable so that it can run for a period of up to 5 days without requiring adjustments. See Figure 2.0-39.

Information can be picked up and recorded at bandwidths of 500 cycles, 2kc, or 4kc by selecting proper plug-in modules. The data channels, in addition to being recorded on 14-channel tape recorders, can be monitored by operating personnel during prelaunch tests.

In order to keep down-time to a minimum and to provide maximum flexibility, the entire system is constructed of semi-conductor plug-in modules. The modules operate independently with a minimum of cross talk.

The system is equipped with a confidence monitor and an automatic channel test to insure reliable operation. The system can be operated either manually or automatically and is provided with "quick-checks" to show if each of the 336 channels are operating within tolerance.

There is a 5-step voltage calibration provided which is capable of either local or remote operation which can test each data channel for an out of tolerance condition. It provides both AC and DC calibration voltages and can be operated either automatically or manually. The calibration unit is of such design that any or all channels can be calibrated at one time.

2.22.2.3 Acoustic System. The acoustic data measuring system for MILA is capable of measuring the noise environment produced by large launch vehicles. The system will make simultaneous measurements in the immediate area of the launch pad and at distances several miles from the launch pad. Acoustic data (sound pressure levels and frequency) will be recorded on multi-channel tape recorders for later analysis. See Figure 2.0-40.

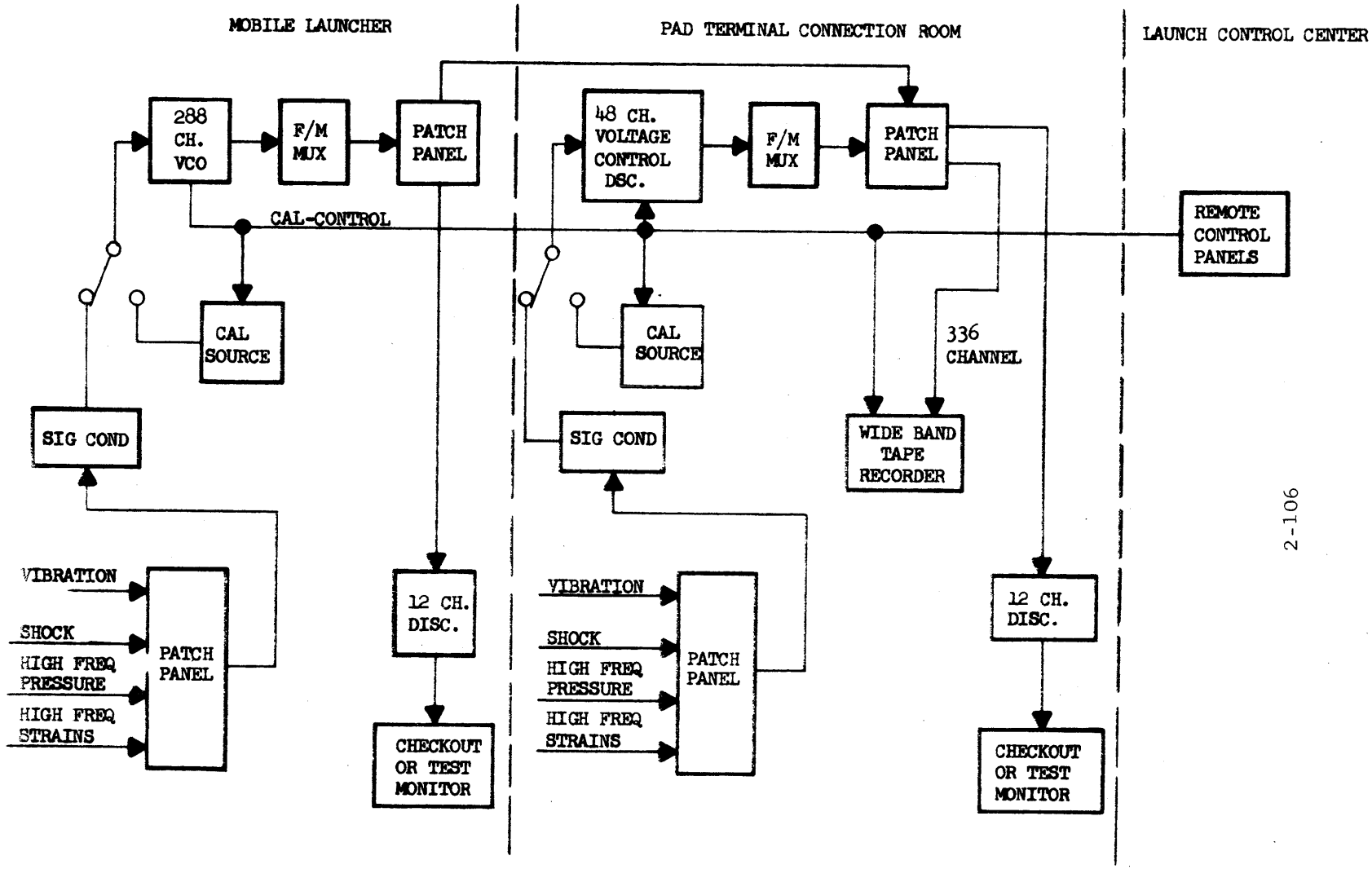

COMPLEX 39 VIBRATION DATA RECORDING SYSTEM

FIGURE 2.0-39

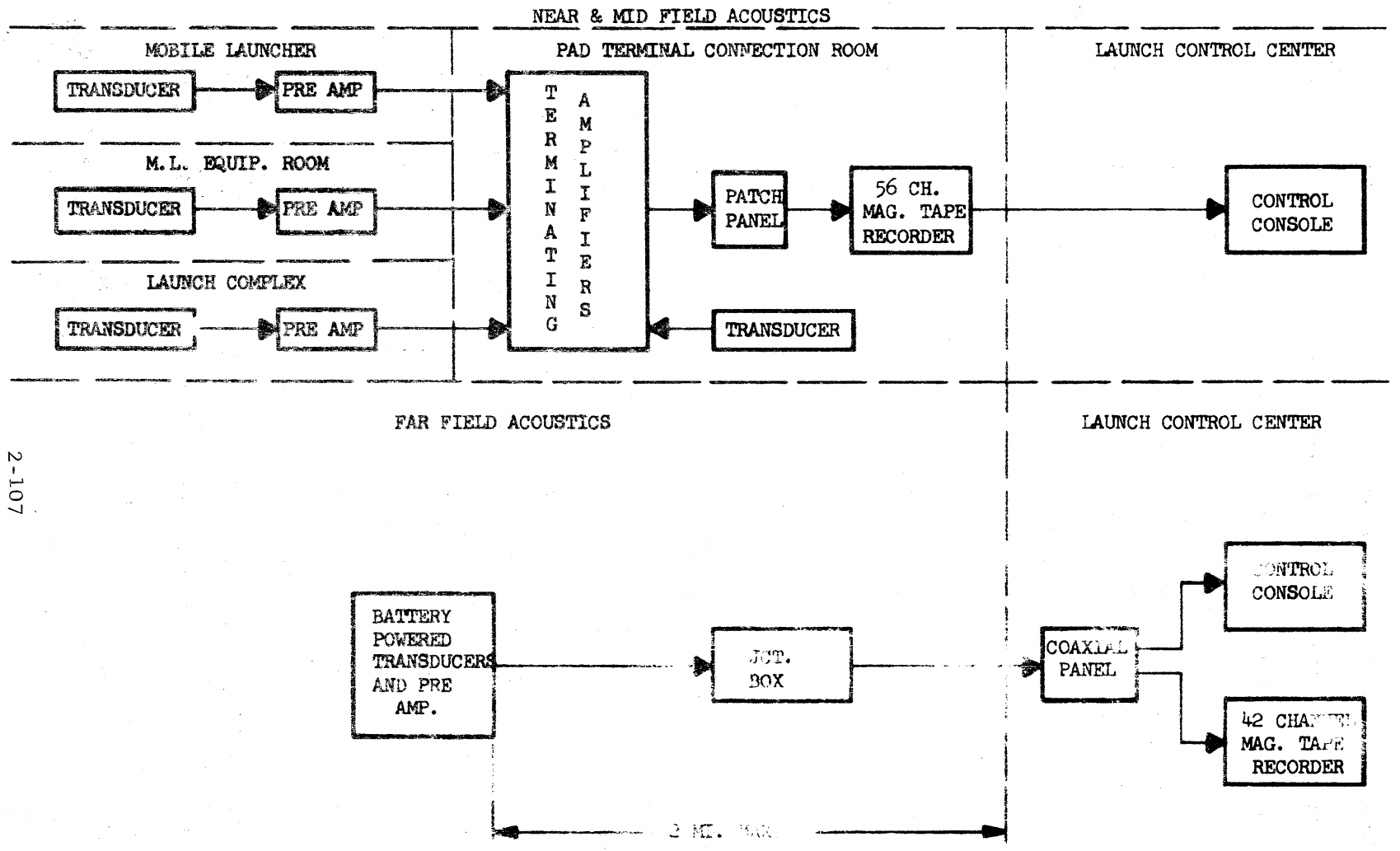

COMPLEX 39 ACOUSTICS SYSTEM

FIGURE 2.0-40

The acoustic measurement system will have a 56-channel capacity in the area at or adjacent to the pad with microphones located on the ML, in the PTCR, and at various positions around the launch pad. Recording equipment for these measurements will be located in the PTCR and controlled remotely from the LCC. Far-field microphones will be located at various sites served by junction boxes up to two miles from the LCC. The recording equipment for these far-field stations will be located in the LCC and will have a 42-channel capacity. Additional channels of acoustic measuring and recording equipment will be portable for use in areas outside the MILA.

2.22.2.4 Safety Monitoring System. The safety monitoring system, Figure 2.0-41, is composed of H_2 fire detection equipment located at the ML and hydrogen storage area, GH_2 detection equipment located at the ML and pad area, and O_2 depletion detection located at the ML and the PTCR.

The fire detection information is distributed via OTV and is monitored and controlled from the LCC. The GH_2 and O_2 detection system is provided with a local alarm as well as a remote alarm and summary status located in the LCC. Hydrazine and hypergolic detectors will be used in various areas but neither the detector location or monitor location has been defined.

2.22.2.5 Transportable Measuring System. The Transportable Measuring System has an independent capability of 260 measurements, 200 of which will be low frequency (narrow band) and 60 of which will be high frequency (wide band) channels. This system is very versatile and will be used for the crawler and mating tests. The measuring and recording equipment used in this trailer will be identifical to and interchangeable with the measuring and recording equipment used elsewhere on Complex 39.

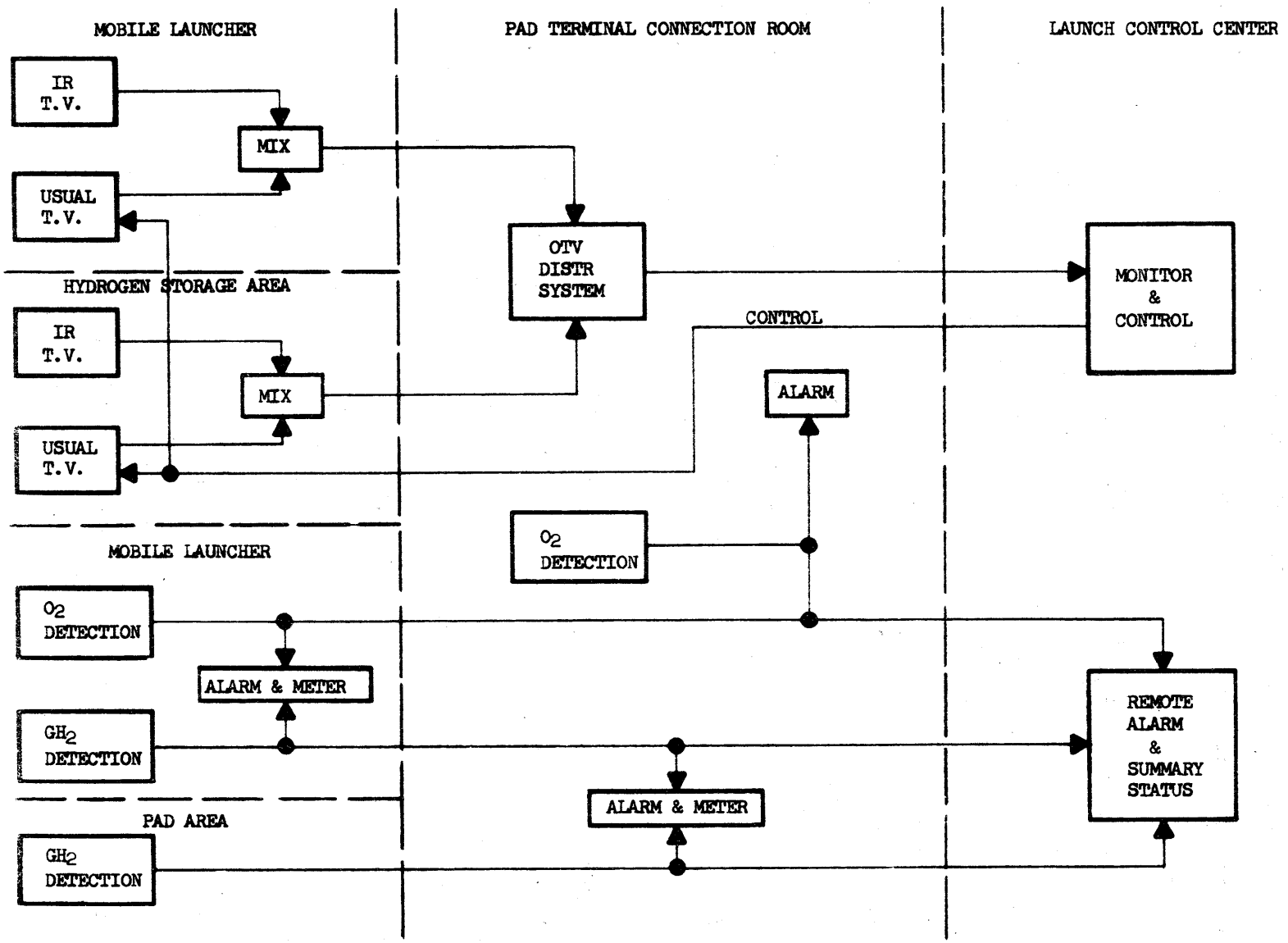

COMPLEX 39 SAFETY MONITORING SYSTEM

FIGURE 2.0-41

2.23 UDOP/ODOP

2.23.1 Function. The UDOP/ODOP systems provide precise and dependable data from which vehicle position, velocity and acceleration can be computed.

2.23.2 General Description. UDOP is a ultra high frequency (450mc and 900mc) trajectory measuring system. ODOP is basically an improved UDOP system, operating at higher frequencies within the ultra high frequency spectrum (890mc and 960mc).

The present and planned MILA systems can be divided into two categories: UDOP/ODOP standard (long) baseline, and ODOP short baseline. Standard & short baseline represents the physical spacing between receiving stations. Geometrical station location determines the portions of a trajectory where accurate data may be derived.

The standard baseline receiver stations can be tuned to operate at the UDOP or ODOP frequencies. There are ten UDOP/ODOP receiver stations, one UDOP transmitter station, one ODOP transmitter station, and a central recording station in the standard baseline system. These stations are within a 15 mile radius and are located on MILA, ETR, and contiguous areas. The standard baseline system provides trajectory data from shortly after liftoff continuously to the horizon.

The ODOP short baseline stations are located in or near the launch pad area, Complex 37 ODOP, the prototype short baseline system, has seven receiver stations within a few hundred meters of the launch pad. Launch Complexes 34 and 39 have five receiver stations and one low power slave interrogator

(transmitter) station within each launch pad area (See Figure 2.0-42). The proximity between stations and their locations near the launch pad provides accurate early trajectory data.

UDOP transponders are interrogated by the UDOP ground transmitter. The standard receiver stations must be operated in the UDOP mode to receive the transponder output.

ODOP transponders may be interrogated prior to liftoff and during the first 60 seconds by a slave interrogator in the launch area. Both standard and short baseline ODOP systems will simultaneously receive the transponder output (limited to line-of-sight). At a preselected range the slave interrogator will be disabled and the standard interrogator enabled.

UDOP and ODOP receiver analogue doppler information is transmitted, via telephone cable or RF link, to the central recording station. There the information is recorded, digitized and formatted. The data in digital format are then made available for real-time or post-flight computation.

The UDOP/ODOP central data recording station is located in the CIF.

2.23.3 UDOP Description. UDOP uses phase comparison techniques to determine vehicle position, velocity and acceleration. A simplified UDOP system is diagrammed in Figure 2.0-43.

The ground transmitter radiates a 450mc signal to the vehicle-borne transponder where it is doubled in frequency to 900mc and retransmitted to the receiver sites. The 450mc signal is phase coherently derived from a 50mc source, which is also radiated from the ground transmitter to each ground

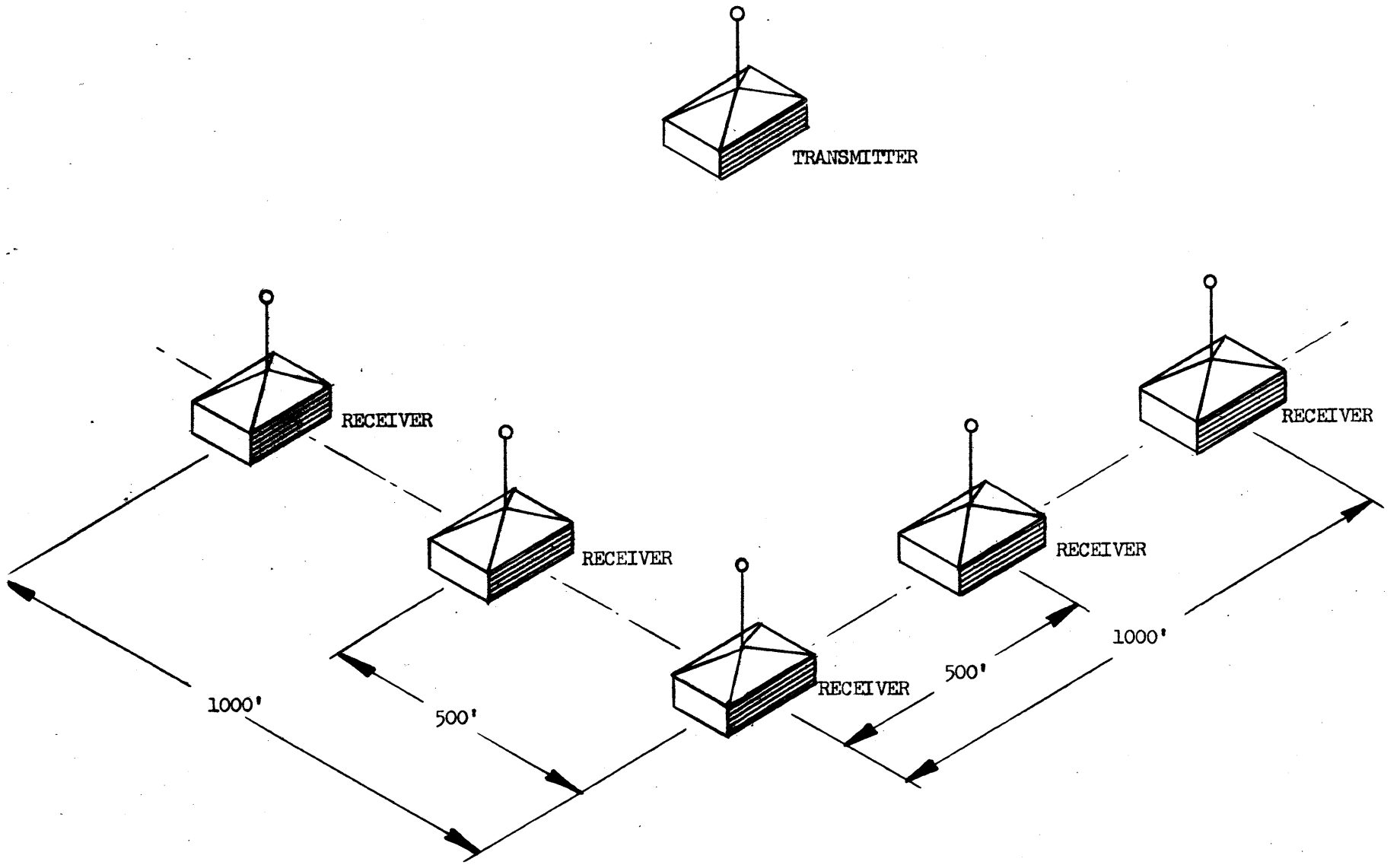

TYPICAL SHORT BASELINE ODOP SYSTEM

FIGURE 2.0-42

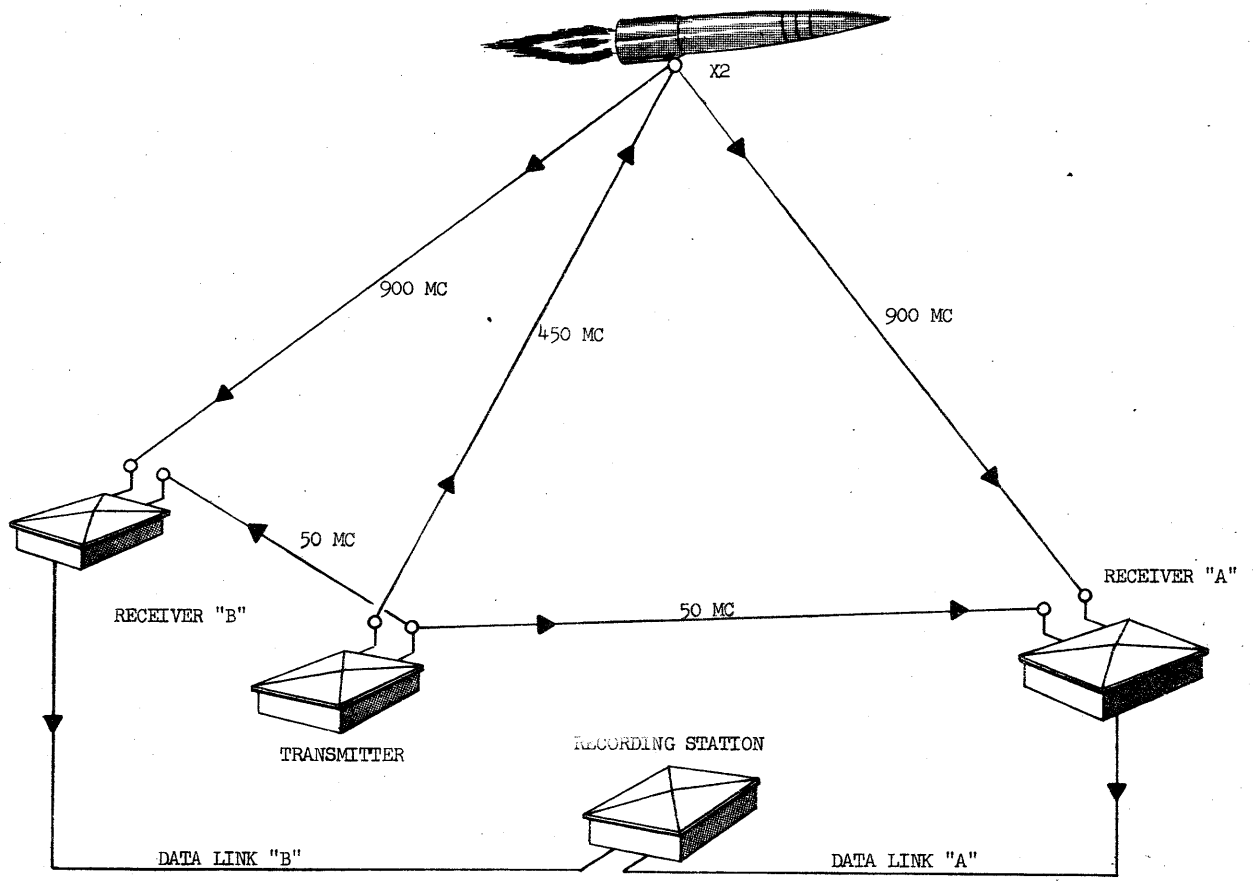

UDOP SYSTEM
PHYSICAL LAYOUT OF A TWO-RECEIVER CONFIGURATION

FIGURE 2.0-43

receiver. The 50mc signal is then used by the ground receivers as a reference to extract doppler shift from the 900mc return signal. Doppler shift is proportional to the radial velocity of the vehicle with respect to the transmitting and receiving sites.

The accumulated doppler count of a receiver, if plotted, describes and ellipsoid, with focal points at the transmitter and receiver. If three receivers are employed, three ellipsoids will be generated, all with a common focal point at the transmitting site, that will intersect at a point in space. A minimum of three receiver sites is required to provide data for a specific section of the trajectory. Accuracy, reliability and trajectory coverage is increased with additional receiving sites.

2.23.4 ODOP Description. The ODOP System is a modification of the UDOP system, designed to improve system accuracy by reducing ionospheric errors. The possibility of a receiver being "captured" by the second harmonic of the transmitter frequency is also eliminated.

The ground transmitter radiates a 890mc signal to the transponder and a 53-1/3mc signal to the ground receivers. The 53-1/3mc signal is a reference for the receivers, similar to the 50mc reference for UDOP.

The transponder receives the 890mc signal, coherently shifts the frequency to 960mc, and retransmits to the ground receivers.

The ODOP ground transmitter and airborne transponder are not compatible with receivers in the UDOP mode. However, the same receivers are adjusted to operate in the ODOP mode and the same methods of extracting doppler data are also employed.

2.24 FLIGHT TV MONITOR SYSTEM

2.24.1 Function. The flight TV monitor station monitors vehicle and spacecraft performance.

2.24.2 Description. Each vehicle camera has its own control unit to provide scanning signals and to amplify video signals. A synchronizing generator provides a timing pulse to keep all cameras synchronized to prevent loss of image continuity in switching. A sequencer switch controls the input of video information to the transmitter. See Figure 2.0-44.

The combined images from all four cameras are recorded on video tape at the ground monitoring station for future reference and study. A separate monitor provides a real-time image from each of the four cameras. A kinescope record is also made of the received video images as a permanent record backup to the video tape recording to ensure against loss of costly test information if a malfunction of equipment should occur.

2.24.2.1 The Parametric Amplifier. The ground system contains a preamplifier between the antenna and the receivers. Parametric amplification was selected because it provides maximum gain with a relatively low noise figure. The amplifier used provides a gain of 20 db with a noise figure of 1.35 db. It was designed for an effective frequency range of 860 to 880mc.

2.24.2.2 The Receivers. A pair of wideband superheterodyne receivers recover the video signal from the amplified frequency modulated signal for the processing and distributing amplifiers. The output of only one receiver is fed into the ground station video processing system at a time, but the output of the other is monitored continuously for picture condition. This permits selection of the best picture for recording or

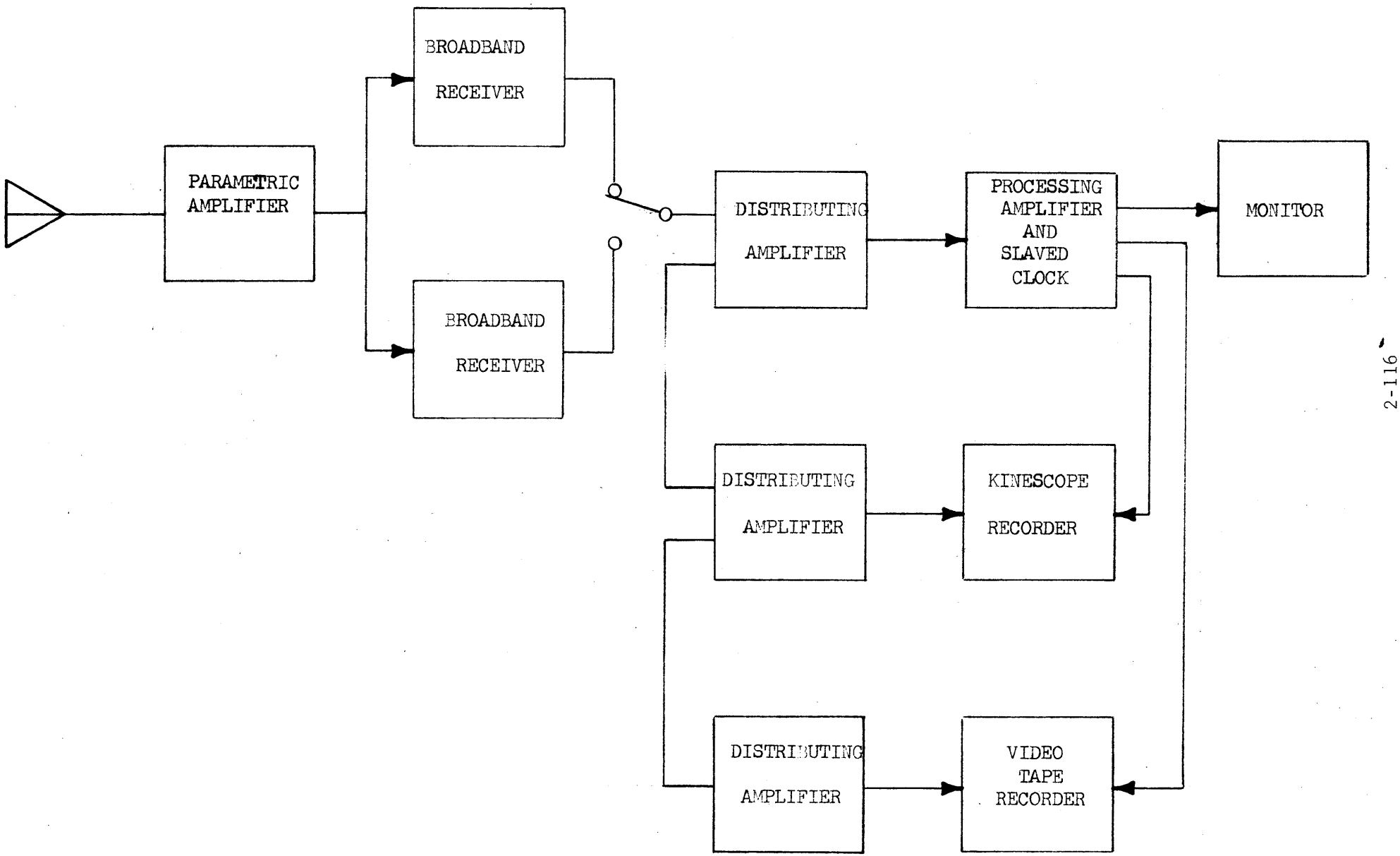

FLIGHT TV MONITOR SYSTEM
BLOCK DIAGRAM

FIGURE 2.0-44

display. The receivers have a frequency range of 860-880mc with a gain of 90db and a noise figure of 12db. Intermediate frequency is 44mc with a bandwidth of 17mc.

2.24.2.3 Distributing Amplifiers. The output from one of the receivers is fed into four parallel distributing amplifiers. These amplifiers increase the video signal strength and serve as buffers between the receivers and other subsystems so that, if one subsystem fails, the others will continue to function. The video bandwidth of each amplifier is 8mc. The output levels may be adjusted for up to 1-volt composite, peak-to-peak amplitude.

2.24.2.4 The Video Recorder. The video recorder used in the system is an Ampex Model 1001A. The recorder was modified to improve its playback resolution; i.e., a video bandwidth of 5.5mc at a tape speed of 15 inches per second. A standard reel of tape will record for 60 minutes. The machine accepts the 1-volt composite signal into a terminated input of 75 ohms, unbalanced. All the video information from the receiver is recorded on the main video track. The remaining two tracks, usually used for the audio channel and the cue channel, are used for other functions.

Circuits controlled by the edit pulse produce binary numbers serially from 1 to 99,999 which are recorded on the cue track, one for each picture frame. Thus, each picture frame may be located by its own identifying number whenever the tape is used with the study unit, or when the frames are being individually displayed.

The video tape recorder can distinguish between the first and second vertical scanning pulse in a picture frame. The beginning of each frame is marked by

recording an edit pulse on the tape. This edit pulse also corrects the pulsing of the sequence switcher if frame registry of the picture is lost.

The video recorder output may also be applied to the kinescope recorder and the images recorded on photographic film.

2.24.2.5 The Kinescope Recorder. Output from a second of four distributing amplifiers is applied to the kinescope recorder, a Bach-Auricon 16mm motion-picture camera facing an 8-inch standard wideband image monitor. All information from the receiver is reproduced on the monitor and photographed at 30 frames per second. The film capacity of the camera is 1200 feet.

In order that individual pictures may be identified later in relation to the camera of origin and time of exposure numbers are simultaneously photographed in the upper right- and left-hand corners of the picture. A 1-digit number in the upper-right corner indicates the number of the camera in which the picture originated. In the upper-left corner, a 3-digit number indicates the flight time in seconds after liftoff. The numbering system for these 3-digit numbers begins to function when the countdown clock reaches 0. The kinescope film may be displayed on a kinescope monitor tube for study.

2.24.2.6 The Synchronous Generator and Slaved Clock. One output of the third distributing amplifier is applied to a processing amplifier where the video information is stripped from the synchronizing signals and applied to the sync lock unit. The sync lock and a ground system synchronous generator are tied together in a servo-loop configuration to form a slaved clock which serves as a master timer for the entire ground station. The sync lock and sync generator operate at the standard frequency

of 15,750 cycles per second for the horizontal sweep and 60 cycles per second for the vertical. In the absence of a sync signal from the vehicle, the sync generator keeps all the ground station systems synchronized.

2.25 COMPLEX CONTROL CENTER

2.25.1 Function. The Complex Control Center (CCC) monitors and controls ground support systems essential to launch operations. Additionally, the CCC will provide the means of continually monitoring certain equipment required for the operation of Launch Complex 39.

2.25.2 System Description. The Complex Control Center, located on the first floor of the launch control center building, utilizes consoles containing groups of modular equipment to monitor the status of various systems. Data displayed on the consoles is used to control system action either directly from the CCC or indirectly by utilizing the available communications. The systems to be monitored by the CCC are:

a. Operational Television System.

b. Operational Intercom System.

c. *Water Systems.

d. *Power Distribution System.

e. *Emergency Power Systems.

f. *Heating, Ventilating, and Air Conditioning Systems.

g. *Elevators.

h. *Fire Alarm System.

i. *Area Warning System.

j. Pneumatic Supply Systems.

k. *Hazards Monitoring System.

l. High Intensity Lighting Systems.

m. *Meteorological and Lightning Prediction.

n. Photographic Camera System.

o. *Compressed Air Systems.

p. *Operational Paging System.

The systems marked with an asterisk are those systems that will be monitored by the CCC twenty-four (24) hours, seven (7) days a week. The remaining systems will be monitored by the CCC during the period scheduled for use in connection with launch vehicle activities.

The relationship of the CCC to other launch complex 39 activities is shown in Figure 2.0-45.

2.25.2.1 System Criteria. The CCC plans as currently conceived are based on the following criteria.

a. Systems Critical to Launch. Systems that are critical to launch are provided with indications of malfunctions, indications which are sufficient to ensure proper operation, controls to minimize hold time within the limits of economic feasibility and controls to isolate malfunctions to the maximum possible extent.

b. Systems Critical to Test. Systems which are critical to test will be monitored and controlled to provide uniformity of operations, ensure noninterference between tests and minimize support personnel requirements.

c. Systems Necessary to Ensure Protection of the Complex Facilities and the Vehicle. The continual safety of the vehicle and complex is dependent upon the ability to continually monitor protective systems. This requires instrumentation for normal and malfunction information and control under adverse conditions of system malfunction. This will

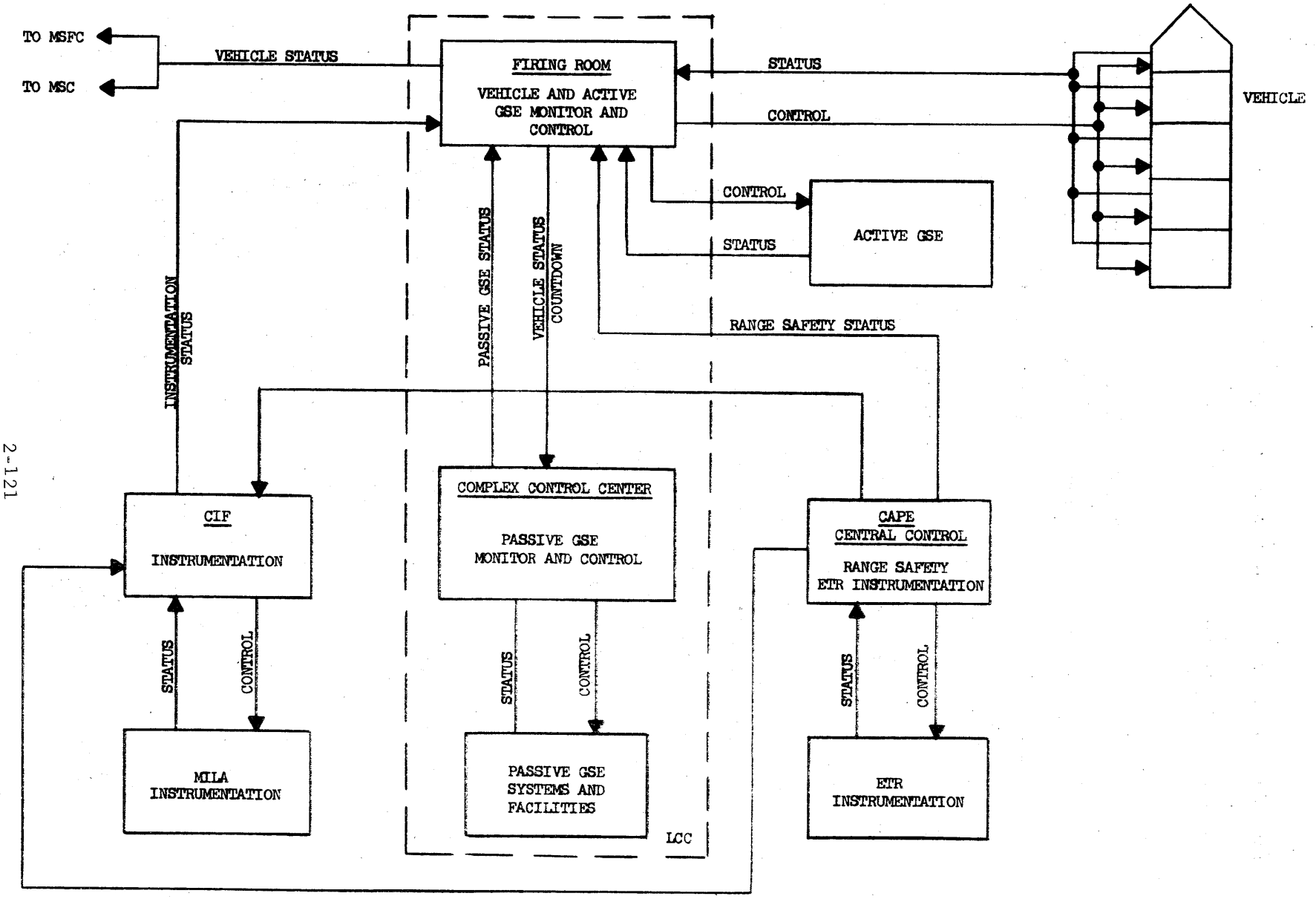

COMPLEX CONTROL CENTER INFORMATION FLOW CHART

FIGURE 2.0-45

provide additional protection through an early recognition of a potential problem with early action to prevent or decrease the seriousness of a malfunction.

d. Personnel Safety. Safety of complex personnel is of primary concern to all participants of an operation. This requires centralized monitoring of hazardous conditions with the control capability to minimize the adverse effects.

2.25.2.2 CCC Control Concept. The Complex Control Center will control the pad perimeter searchlights and the flame pit lighting critical for photographic and television coverage of the launch. The CCC will provide synchro tracking signals to the pad perimeter searchlight elevation mechanism to allow vehicle illumination to continue to an altitude of 1300 feet. In addition, the searchlight arrays will utilize these signals to increase the light intensity as a function of vehicle altitude. Adequate indication will be provided in the CCC to assure satisfactory illumination of the vehicle during launch.

3.0 SPACECRAFT OPERATIONS AND CHECKOUT AREA

With the exception of the Propulsion Test Facility, this section describes the MILA facilities that are used for the assembly and checkout of the spacecraft. The Propulsion Test Facility, formerly identified as Launch Complex 16, is located on Cape Kennedy Air Force Station. See Figure 3.0-1A and 3.0-1B for identification of the Spacecraft Operations and Checkout Area.

3.1 MANNED SPACECRAFT OPERATIONS BUILDING

3.1.1 Function. This facility is for modification, assembly, and non-hazardous checkout of all manned spacecraft.

3.1.2 Location. The Manned Spacecraft Operation Building (MSOB) is located in the Merritt Island Industrial Area on Goddard Avenue. See Figure 3.0-2.

3.1.3 Description. This multi-story structure of approximately 600,000 square feet provides space for engineering and administration, mission briefing, cafeteria, laboratories, assembly and test, astronaut quarters, utilities and other services.

The assembly and test area is 86 feet wide and 650 feet long. See Figure 3.0-3. One-third of this area has a crane hook height of 85 feet, and the remaining two-thirds has a hook height of 50 feet. Each of the bridge cranes in the assembly and test areas has a capacity of 25 tons. Space is provided for two altitude chambers and two integrated systems test stands. Rising panel doors allow the mated spacecraft elements (LEM, CM, SM) to be moved vertically from the integrated test area to the VAB. Adjacent to the assembly and test area is a service area for altitude chamber pumps, shops, and utilities.

M7-355	Manned Spacecraft Operations
M7-504	Spacecraft Spares & Equipment
M7-505	Spacecraft Spares & Equipment
M7-409	Flight Crew Training
M7-531	Banana River Repeater Station
M7-657	Parachute
M7-863	RF Systems Test Tower
M7-867	RF Systems Test Control
M7-961	Life Support Test
M7-1061	Fluid Test Support
M7-1162	Sewage Treatment Sub-Station
M7-1210	Hypergolic Test No. 2
M7-1212	Hypergolic Test No. 1
M7-1412	Cryogenic Test No. 1
M7-1413	Cryogenic Test No. 2
M7-1417	Ordnance Lab
M7-1469	Pyrotechnic Installation
M7-1472	Ordnance Storage

BUILDING LEGEND TO
Figure 3.0-1B
Figure 3.0-1A

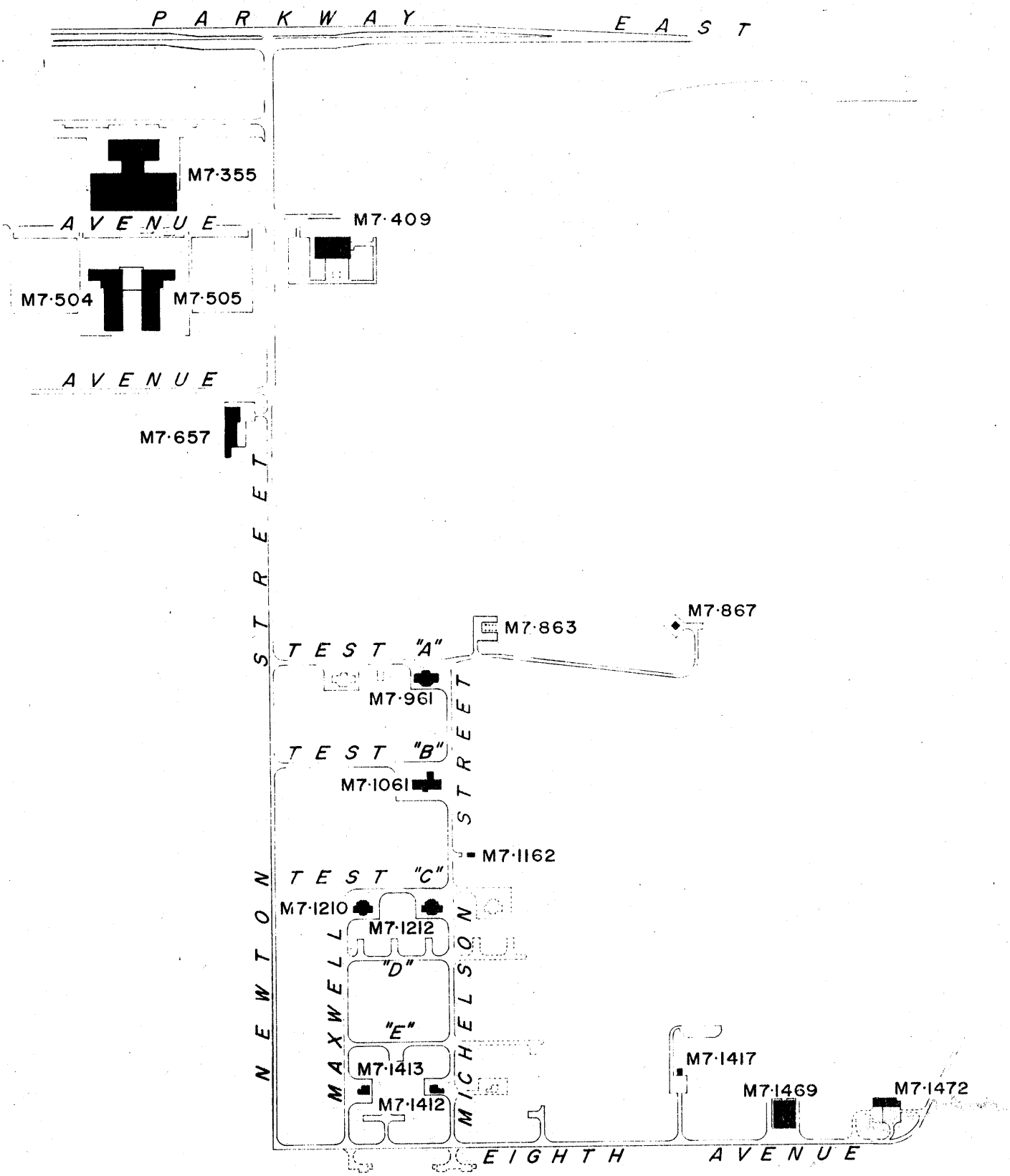

Spacecraft Operations Area - MIIA
Figure 3.0-1B

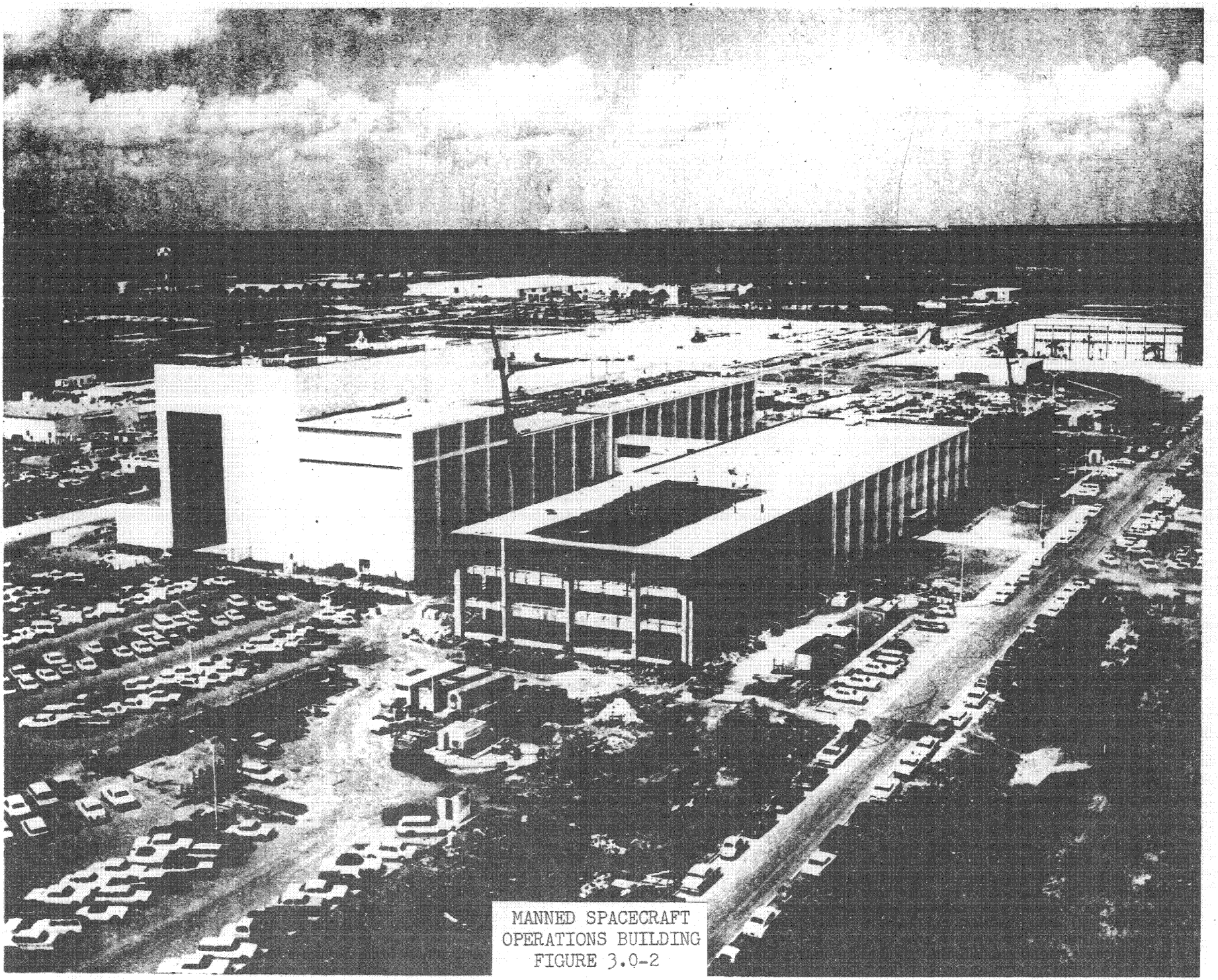

MANNED SPACECRAFT
OPERATIONS BUILDING
FIGURE 3.0-2

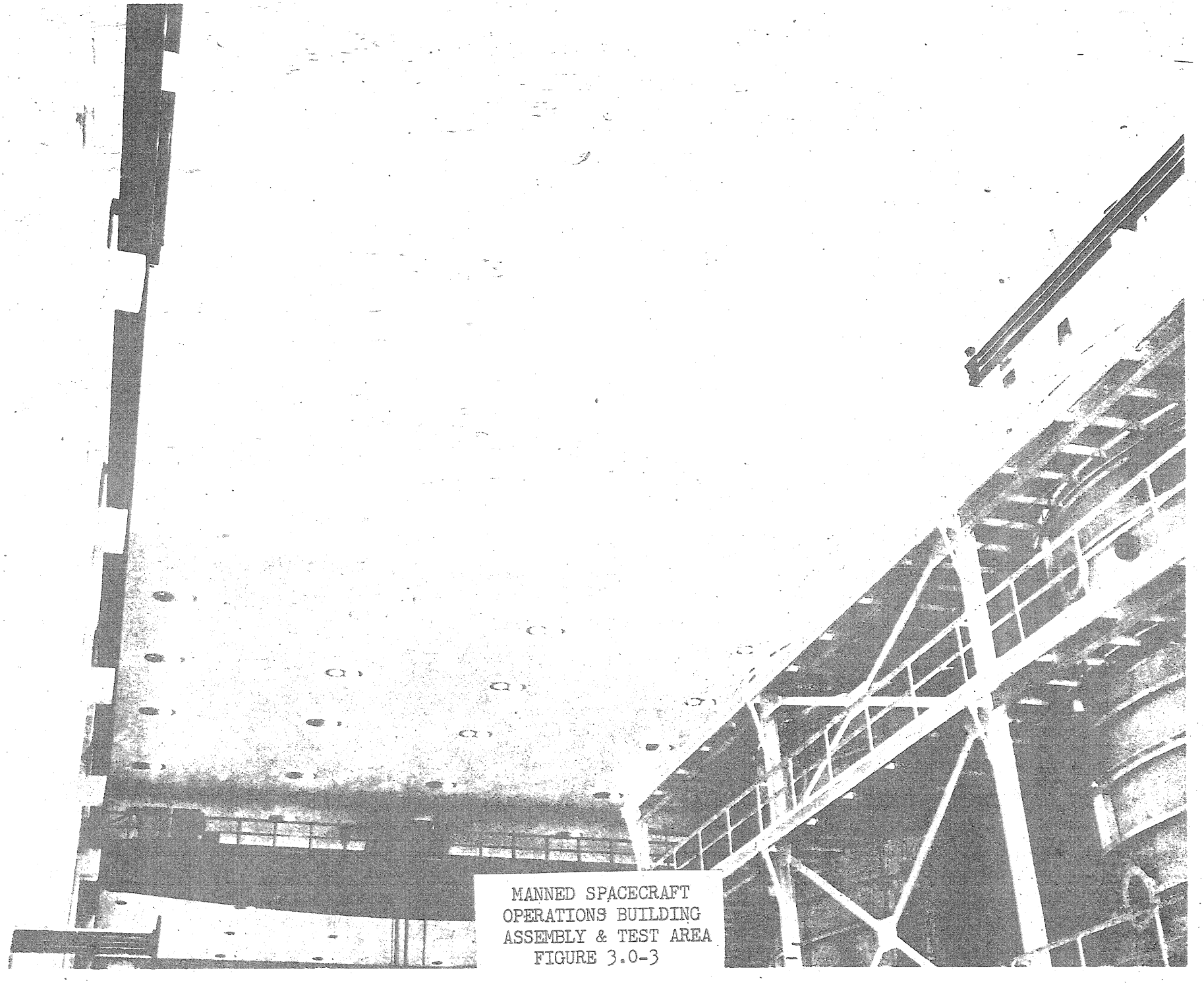

MANNED SPACECRAFT
OPERATIONS BUILDING
ASSEMBLY & TEST AREA
FIGURE 3.0-3

3.2 SPACECRAFT, SPARES AND EQUIPMENT BUILDING

3.2.1 Function. This building provides space for storage, maintenance, and modification of spacecraft GSE and spares.

3.2.2 Location. This building (See Figure 3.0-4) is located in the Merritt Island Industrial Area on Wright Avenue.

3.2.3 Description. The building consists of an east wing, west wing, and a central area with a combined floor area of approxmiately 40,000 square feet. A portion of the building provides controlled environment for storage.

3.3 PARACHUTE BUILDING

3.3.1 Function. This building provides checkout space for the inspection and packaging of parachutes.

3.3.2 Location. The Parachute Building (See Figure 3.0-5) is located in the Merritt Island Industrial Area at the intersection of Congreve Avenue and Newton Street.

3.3.3 Description. This building has a low bay and a central office area. The low bay is for inspecting and packing parachutes. The central office area contains space for bonded storage, for a machine room, and for supporting offices.

3.4 RF SYSTEMS TEST

3.4.1 Function. The range provides equipment and structures to conduct final pre-flight qualification of spacecraft radar systems.

3.4.2 Location. The RF Systems Test Range (See Figure 3.0-6) is located in the Industrial Area on Test Road "A".

3.4.3 Description. The range is located in a controlled, RF-quiet area suitable for qualification of on-board radar transmitters, receivers, and

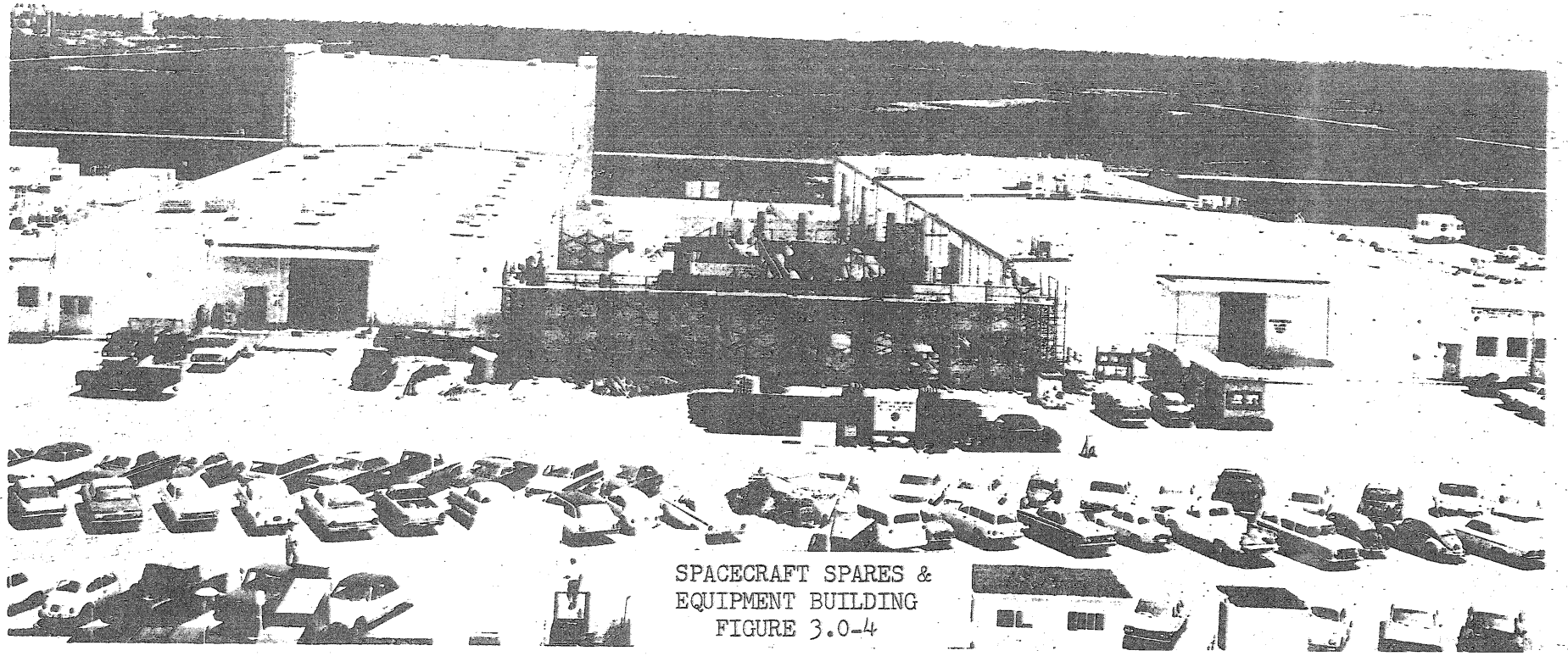

SPACECRAFT SPARES &
EQUIPMENT BUILDING
FIGURE 3.0-4

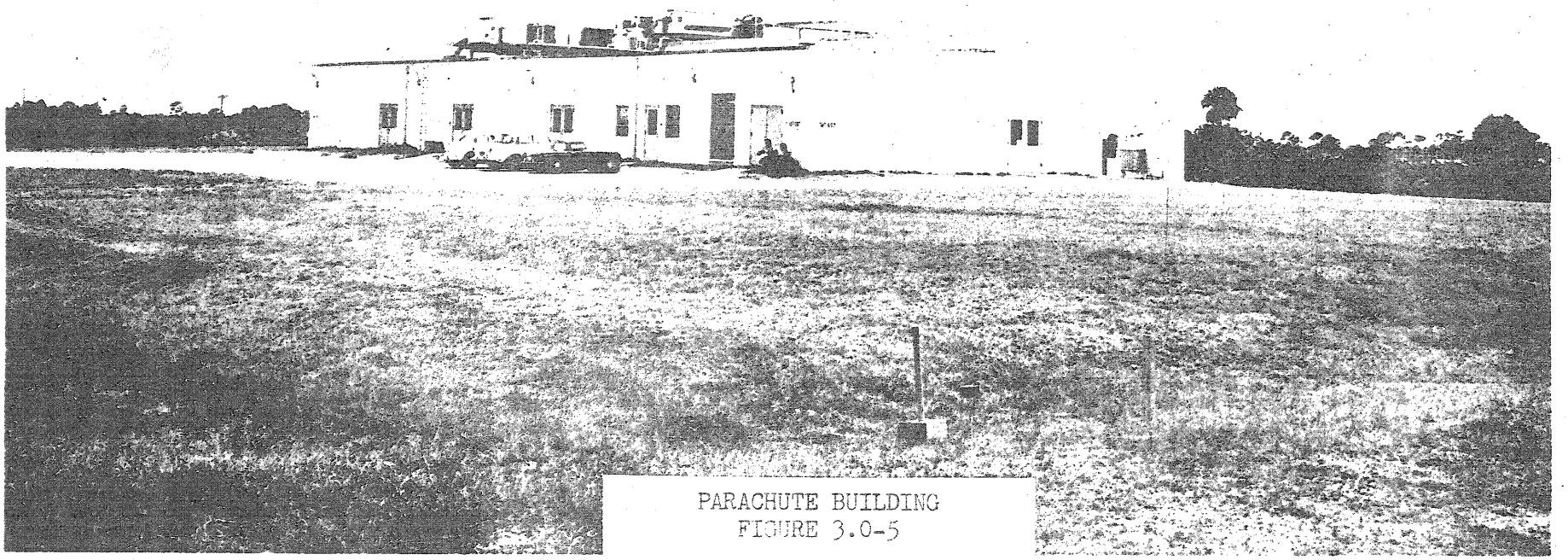

PARACHUTE BUILDING
FIGURE 3.0-5

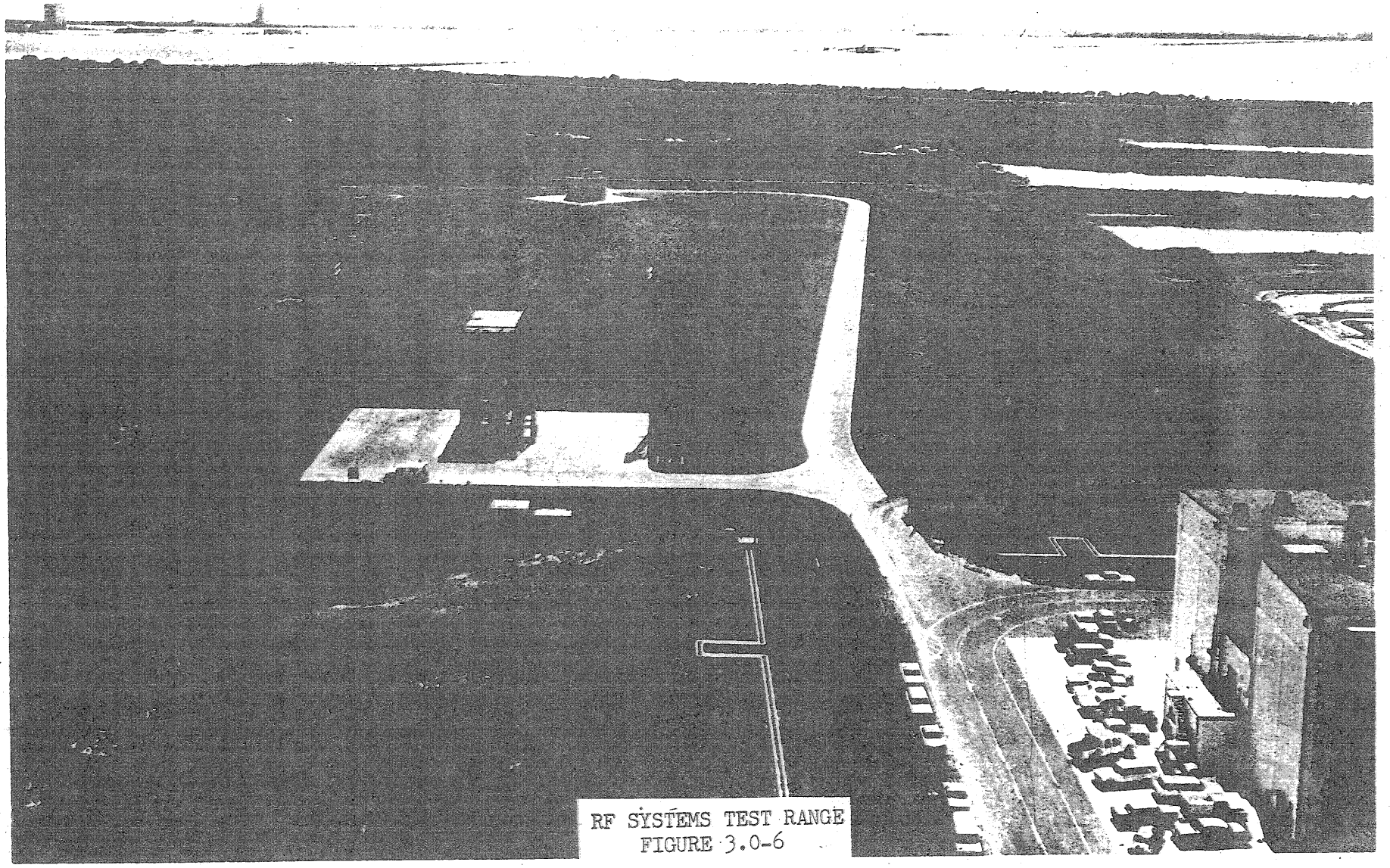

RF SYSTEMS TEST RANGE
FIGURE 3.0-6

antennas. It consists of two towers 1,000 feet apart. A two-story control tower (approximately 20 feet high and 20 feet square) supports the position fixtures, and spacecraft mock-up and radar module. The radar target fixture is supported on a 50-feet high tower.

3.5 ORDNANCE FIELD TEST LABORATORY

3.5.1 Function. The Ordnance Laboratory is for disassembling, checking, testing, and storage of small pyrotechnic devices.

3.5.2 Location. This laboratory (See Figure 3.0-7) is located adjacent to and west of the Weight and Balance Building in the Merritt Island Industrial Area on Eighth Avenue. This facility is isolated from others for safety reasons.

3.5.3 Description. The Ordnance Laboratory contains two test cells, control room, laboratory, washroom and machine shop. The test cells are approximately 400 square feet each. The building is air-conditioned and has fans to remove combustion gases from the test cells. The control room is constructed with blast-resistant walls to protect the operators from explosion hazards.

3.6 ORDNANCE STORAGE BUILDING

3.6.1 Function. This facility provides storage and machine shop area for pyrotechnic devices and for launch escape towers.

3.6.2 Location. The Ordnance Storage Building (See Figure 3.0-8) is located adjacent to and east of the Weight and Balance Building in the Merritt Island Industrial Area on Eighth Avenue.

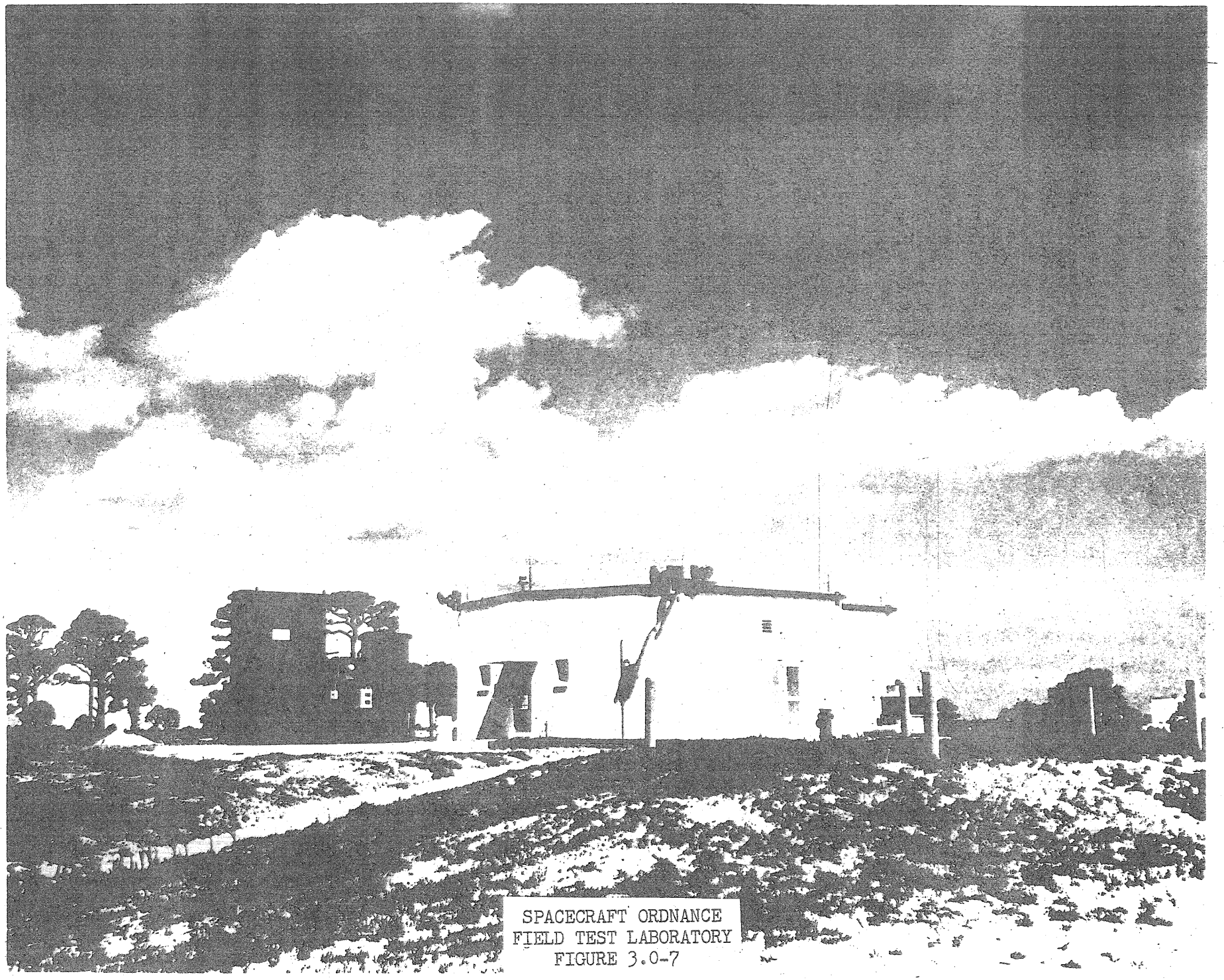

SPACECRAFT ORDNANCE
FIELD TEST LABORATORY
FIGURE 3.0-7

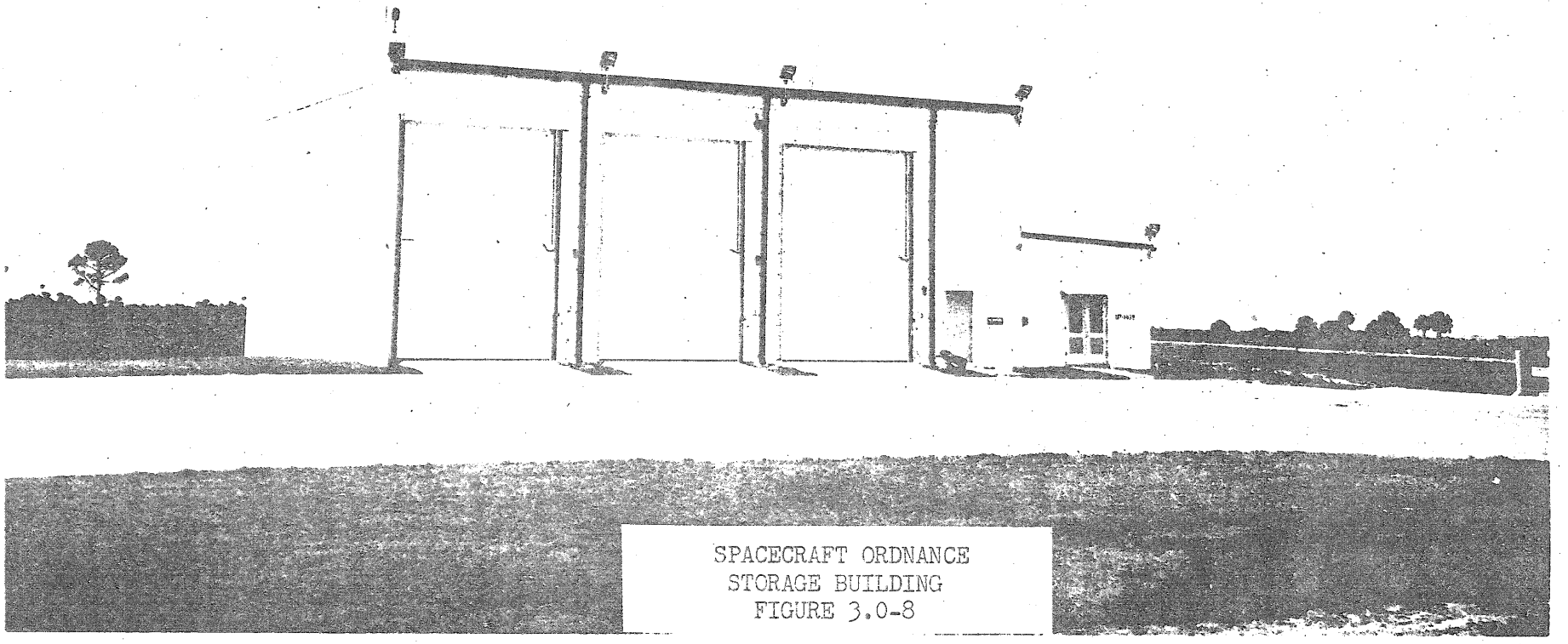

SPACECRAFT ORDNANCE
STORAGE BUILDING
FIGURE 3.0-8

3.6.3 Description. This building contains approximately 3,780 square feet of storage, machine and utility space. About 3,240 square feet of the total space is for ordnance storage. The building is environmentally controlled for storage of pyrotechnic devices and solid fuel motors used on the spacecraft. A crane is provided for handling ordnance items and the aligned launch escape towers. Crane hook height is about 18 feet.

3.7 PYROTECHNIC INSTALLATION BUILDING

3.7.1 Function. This facility is for weighing, balancing, and determining the center of gravity of the spacecraft and for optical alignment of certain pyrotechnics.

3.7.2 Location. The Weight and Balance Building (See Figure 3.0-9) is located in the Merritt Island Industrial Area on Eighth Avenue.

3.7.3 Description. This building contains approximately 18,000 square feet. An area measuring 80 feet by 150 feet by 110 feet high and two service areas of 20 feet by 150 feet will be used for optical alignment of certain critical components such as the spacecraft escape towers, and retro-rockets. The building contains a 90-feet high motorized door at the south side of the high bay area which permits entry of a fully mated spacecraft, (LEM, Apollo, etc.) and has an overhead crane with a hook height of 95 feet. The building is air-conditioned.

3.8 FLIGHT CREW TRAINING BUILDINGS

3.8.1 Function. These buildings are for simulated lunar mission training of the astronauts and checkout of the other lunar mission support facilities.

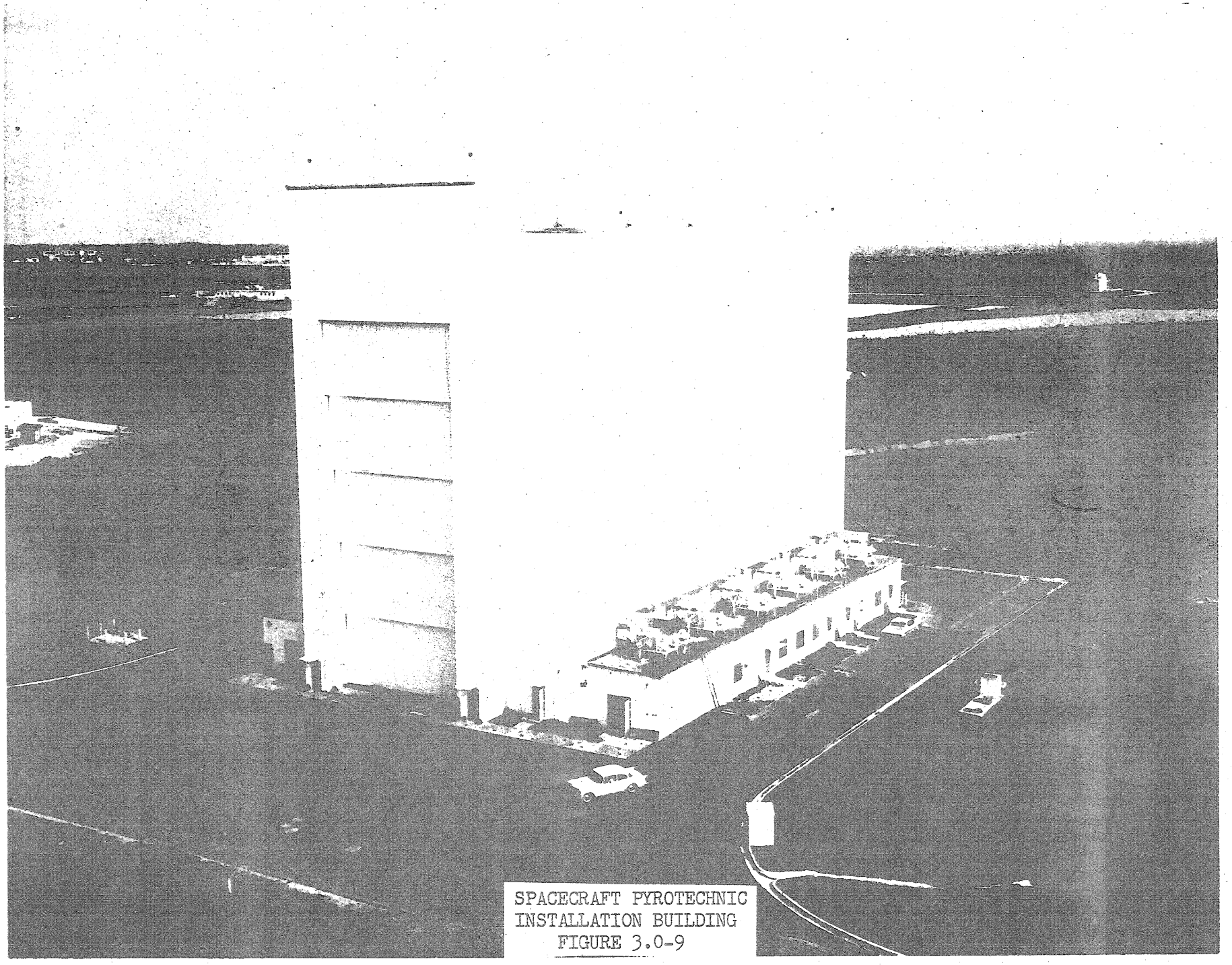

SPACECRAFT PYROTECHNIC
INSTALLATION BUILDING
FIGURE 3.0-9

3.8.2 Location. The Flight Crew Training Buildings (See Figure 3.0-10) are located on Newton Street and Wright Avenue in the Merritt Island Industrial Area.

3.8.3 Description. This facility is composed of the Flight Crew Training Building and the Equipment Support Building. The Flight Crew Training Building measures 200 feet long by 152'-6" wide and is constructed of reinforced concrete frame with masonry exterior walls. This building is constructed with a single story section of 12,900 square feet which accomodates the office and operational support functions. The remainder of this structure is designated as Low and High Bay Areas, 6,600 and 11,000 square feet, respectively. These latter areas are the operation areas and are equipped with a false floor. The false floor is composed of modular 3 foot by 3 foot removable panels supported by a sub-structure of metal stringers and screw adjustable pedestals. The metal of this floor sub-structure is tied together by a continupus grounding conductor which is connected to building ground. The sub-floor area, approximately two feet deep, is a plenum chamber used to supply cooling air to the electronic equipment. The equipment cooling system is equipped with alarm devices to indicate malfunctions and out-of-operating tolerance. This alarm devices allow for the manual shutdown and the securing of the electronic equipment until repairs to the cooling system can be accomplished. The walls of these operation areas are covered from floor to ceiling with acoustical tile.

The single story portion of this building consists of the following areas: office area, tape file room, telephone intercom and data interface room, program preparations room, shop, locker room, and experimental training aids room. Computers, peripheral equipment and consoles are located in the adjacent low bay area.

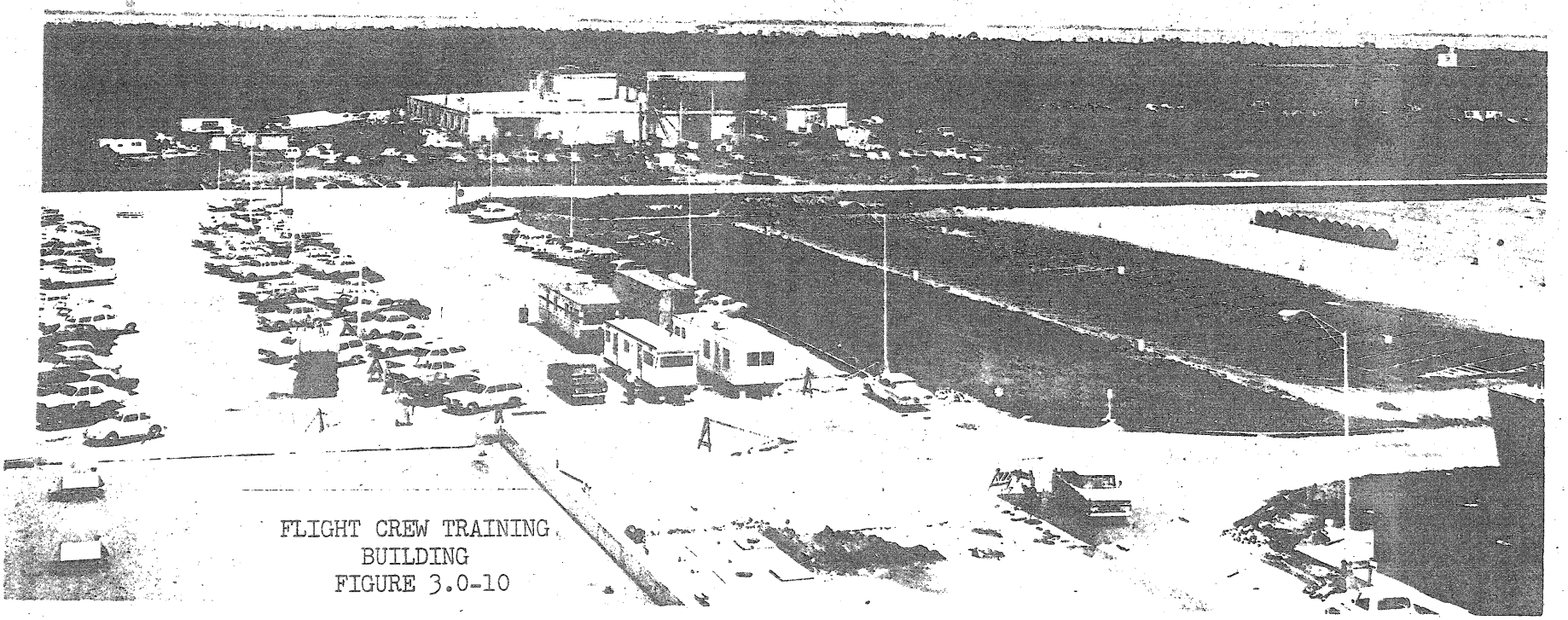

FLIGHT CREW TRAINING
BUILDING
FIGURE 3.0-10

Two lunar mission simulators and two part task trainers are located in the high bay area. The clear height in this area, false floor to ceiling, is 25'-0". The electrical power system for the electronic and instrumentation equipment consists of an uninterrupted power source of 200 KW for operation of the simulators and trainers with their associated computers and peripheral equipment. A separate and distinct grounding system has been incorporated into the building design for the electronic and instrumentation equipment. This ground system is isolated from the static/building ground system except for earth conductivity to prevent "ground-loops" which may induce disturbing voltages into the electronic equipment.

The Equipment Support Building, measuring 40 feet by 45 feet, is located 50 feet south of the Flight Crew Training Building.

3.9 LIFE SUPPORT TEST BUILDING

3.9.1 Function. This facility is used to test the spacecraft environmental control system (life support).

3.9.2 Location. The Life Support Test Building (See Figure 3.0-11), an integral part of the Fluid Test Area, is located in the Merritt Island Industrial Area on Test Road "A".

3.9.3 Description. This facility contains two test cells, a control room, equipment storage rooms, and storage for LOX and GOX. Clean room conditions are provided through most of the building by means of design features such as smooth walls, ceilings and floors, and by providing special air filtering. Space is provided for testing of the ECS of the command and service modules stacked vertically or placed side by side.

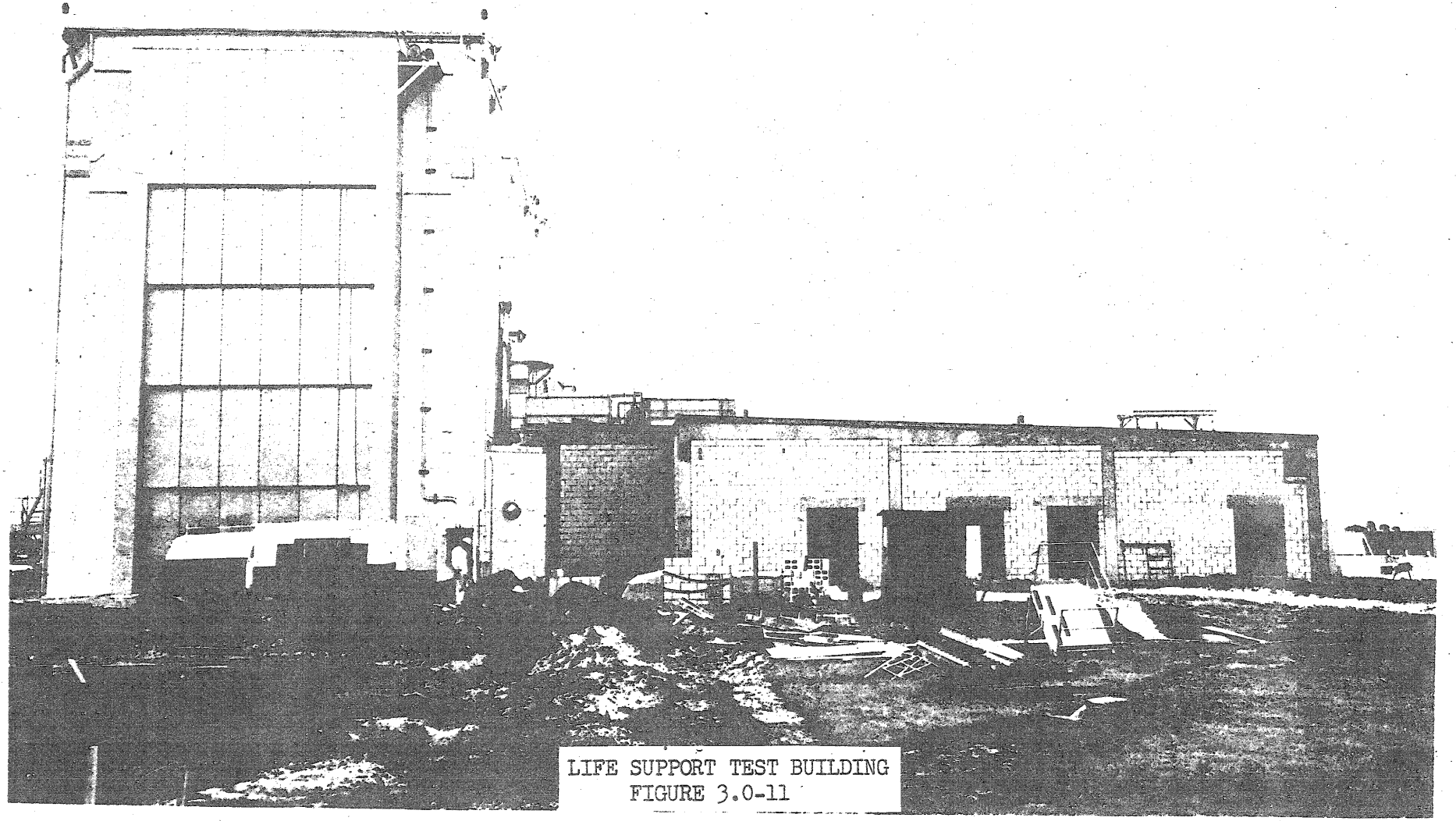

LIFE SUPPORT TEST BUILDING
FIGURE 3.0-11

3.10 HYPERGOLIC TEST BUILDING

3.10.1 Function. This building provides facilities for checkout of the hypergolic systems of the spacecraft.

3.10.2 Location. The Hypergolic Test Building (See Figure 3.0-12), an integral part of the Fluid Test Area, is located in the Merritt Island Industrial Area on Test Road "C".

3.10.3 Description. The building is irregular in shape and contains 7,100 square feet of floor area. It has a two story central structure and two test cells 40 feet square and 60 feet high. The test cells are located on opposite sides of the central structure.

Each test cell has an overhead crane with a hook height of 45 feet. The test cells have large capacity exhuast systems and a floor system which will collect and dilute hypergolic spills. Chilled water storage tank, chilled water basins, washdown systems and contaminated effluent tank to control and contain inadvertent spilling of toxic and combustible propellants will be provided. The central structure includes control rooms, equipment rooms, and a machine room.

The entire building is air-conditioned and has special features to provide for safe handling of the hazardous fuels and oxidizers. The control room is designed to protect operators from possible explosions or toxic fumes during testing of the spacecraft hypergolic systems.

3.11 CRYOGENIC TEST BUILDING

3.11.1 Function. These buildings provide equipment for the bench testing of spacecraft cryogenic fuel system components, and for the fuel cell liquid hydrogen supply system of the Command Module.

This Page Intentionally Left Blank

Figure 3.0-12

3.11.2 Location. The Cryogenic Test Buildings (See Figure 3.0-13), an integral part of the Fluid Test Area, are located in the Merritt Island Industrial Area on Michelson Street and Maxwell Street.

3.11.3 Description. This building consists of one test cell having an overhead crane with a 45 foot hook height, a laboratory, and a dressing room. The four walls of the test cells have 40-foot high motorized doors. A deluge fire protection system is provided in the test cell. The building is equipped with a gas detection and alarm system.

3.12 FLUID TEST SUPPORT BUILDING

3.12.1 Function. This facility provides support for all test operations conducted in the SCO fluid test area.

3.12.2 Location. The Fluid Test Area Support Building (See Figure 3.0-14) is located in the Merritt Island Industrial Area on Test Road "B".

3.12.3 Description. Laboratory, shop, and office space are provided for processing spacecraft components. Components enter the building via the production control area and are then cleaned, inspected and stored.

3.13 PROPULSION TEST FACILITY (SPACECRAFT)

3.13.1 Function. This facility is for static firing test of the Spacecraft Service Module.

3.13.2 Location. The facility (See Figure 3.0-15) is located at Launch Complex 16, ICBM Road, Cape Kennedy Air Force Station.

3.13.3 Description.

3.13.3.1 General. The facility consists of the Service Building, Fuel Area, Oxidizer Area, Helium Area, Transfer Room, and Control Room.

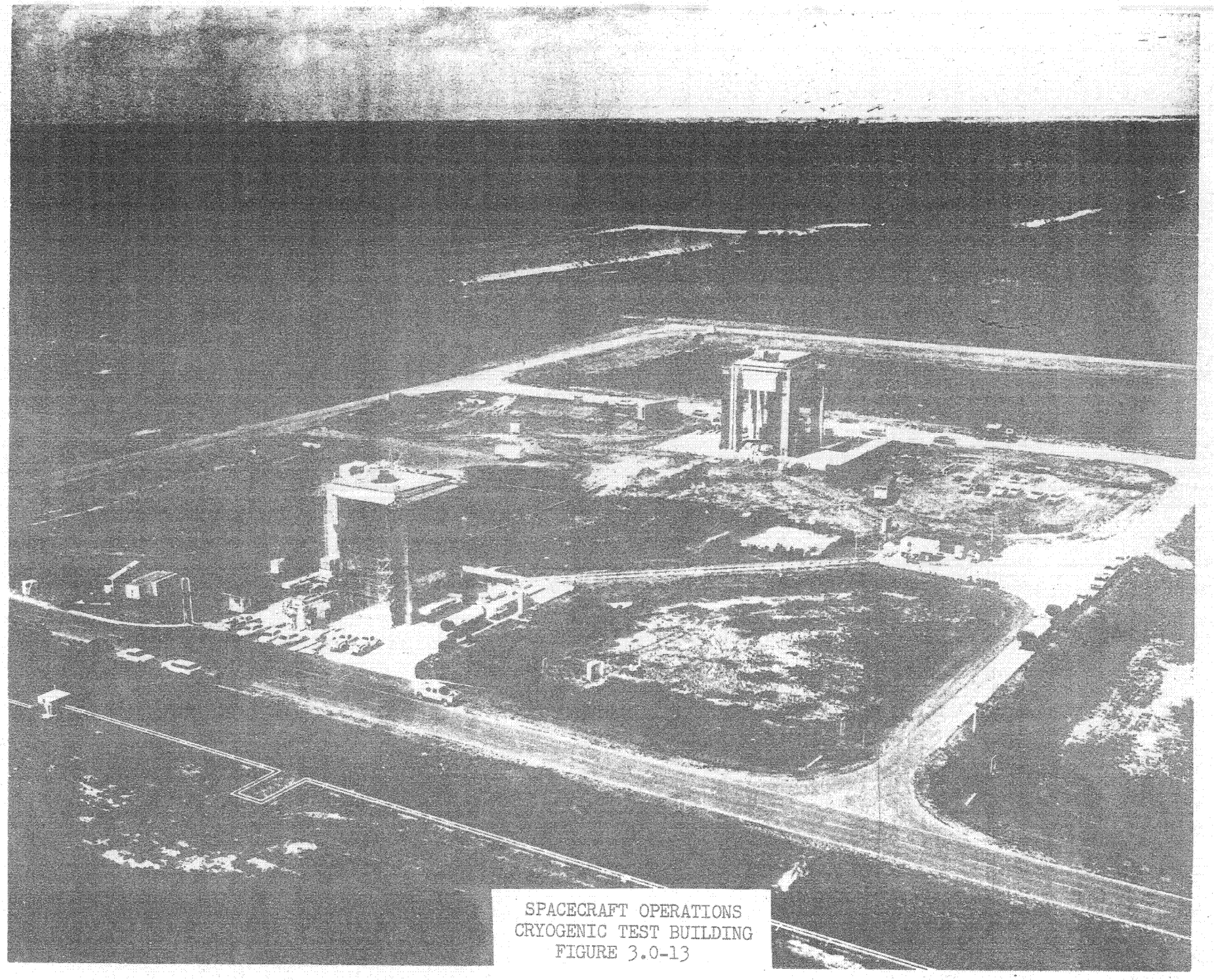

SPACECRAFT OPERATIONS
CRYOGENIC TEST BUILDING
FIGURE 3.0-13

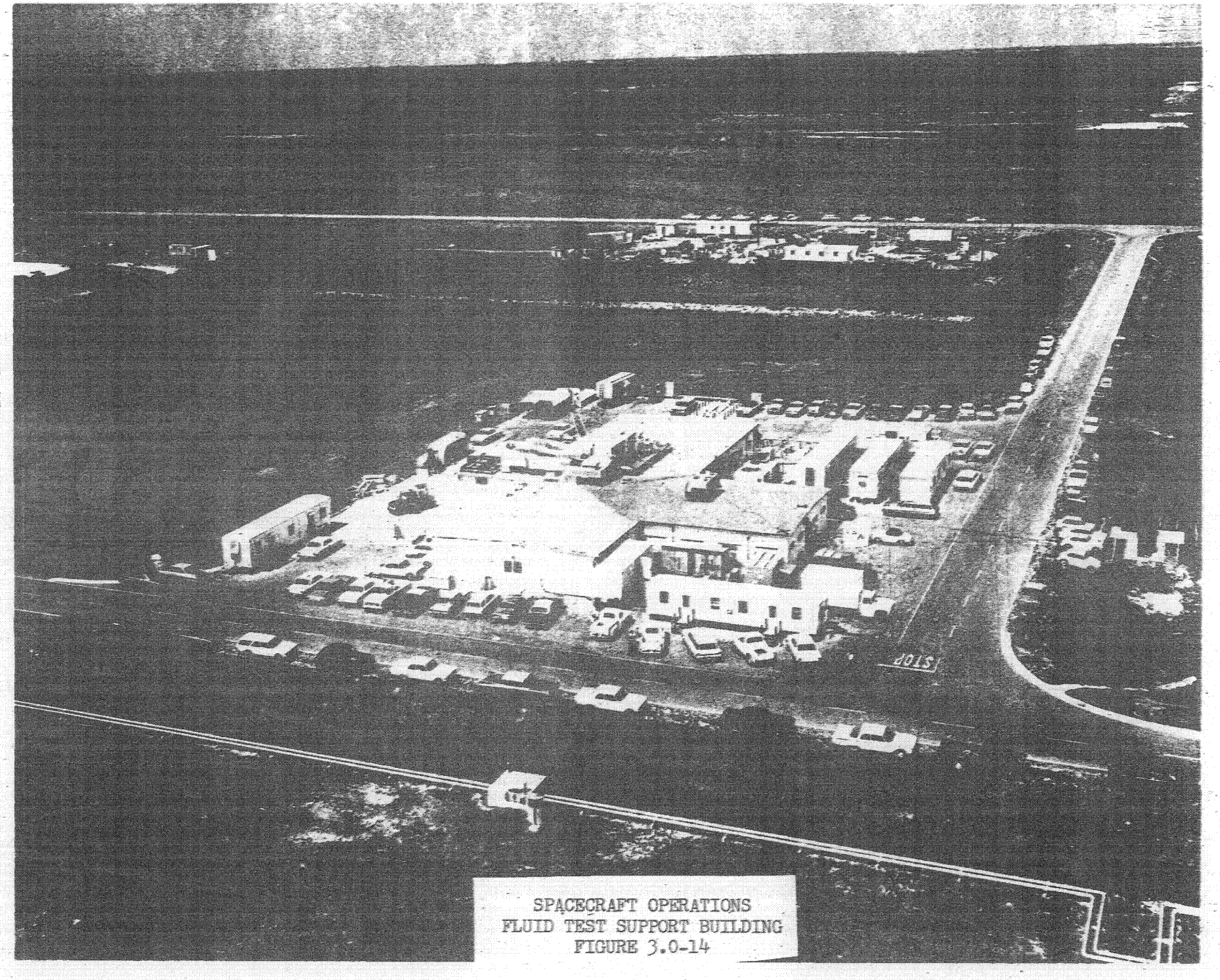

SPACECRAFT OPERATIONS
FLUID TEST SUPPORT BUILDING
FIGURE 3.0-14

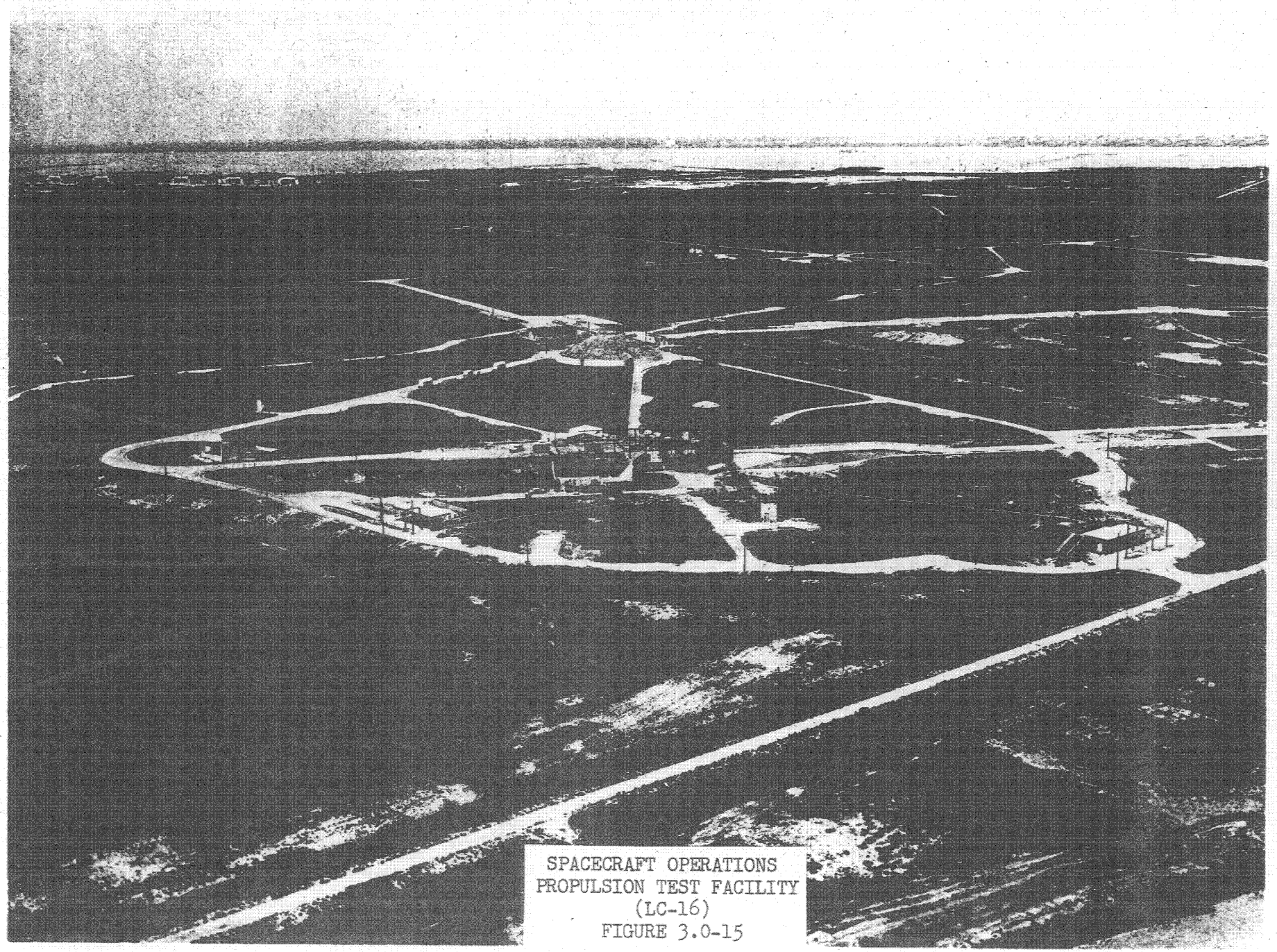

SPACECRAFT OPERATIONS
PROPULSION TEST FACILITY
(LC-16)
FIGURE 3.0-15

3.13.3.2 Service Building. This building consists of a cylindrical steel tube resting on the launch pad. The building has a diameter of 30' and is 35' high. A removable roof is provided to facilitate erection of the Service Module on the thrust stand. The thrust stand is a steel ring, 12 feet in diameter, with legs. The top of the stand is 11 feet above the pad. There is an opening at pad level, 11 feet wide by 10 feet high, with steel double doors.

Two work platforms are provided inside the building. One is 9'-10" above the pad and one is 17'-10" above the pad. One platform is provided on the outside of the building above the pad to provide access to the roof.

The LC 16 frame bucket is used to dissipate gases and flame. The LC 16 missile air-conditioning system is used to provide cool air for ventilation of the building.

3.13.3.3 Fuel Area. This area is located in the northeast sector of LC 16. An interface is provided to connect fuel lines and services with mobile fuel units. A fuel transfer and conditioning unit has the capbility of conditioning the fuel in a range between +35° to 140°F with a tolerance of $\pm$ 2°F. The transfer capability is 15,300 pounds of fuel in forty-five minutes. A fuel ready storage unit provides ambient storage during conditioning. A fuel toxic vapor disposal unit dilutes the vapors, from the propulsion system during venting and purging, and exhausts the diluted vapors.

At the interface for the operation of the mobile units, 440V, 60 CY, 3 Ø electric power 20 SCFM of gaseous nitrogen at 200 to 3,000 psig is provided.

3.13.3.4 Oxidizer Area. The oxidizer area is located in the southeast sector of LC 16. An interface is provided to connect oxidizer lines and services to the mobile units.

An oxidizer transfer and conditioning unit has the capability of conditioning the oxidizer and transferring oxidizer at a rate of 30,660 pounds in forty-five minutes.

The oxidizer ready storage unit provides ambient storage during conditioning. An oxidizer toxic vapor disposal unit dilutes the oxidizer vapors, from the propulsion system during venting and purging and exhausts the mixture to the atmosphere. At the interface, 440V, 60c, 3 Ø electrical power and 400 SCFM gaseous nitrogen at 200 to 3,000 psig is provided.

3.13.3.5 Helium Area. The helium area is located in the southwest sector of LC 16. An interface is provided to connect lines and services to mobile supply units. A helium booster unit receives commercial helium gas at pressures from 200 to 2,200 psig and boosts the pressure to 6,000 psig.

A helium ready storage container stores 450 C.F. of the 6,000 psig helium. A helium transfer unit reduces pressure, cools, regulates flow and transfers helium to the propulsion system helium storage tanks. At the interface, 120V, 60CY and 440V, 60 CY, 3 Ø electrical power, liquid nitrogen, and 50 psig, 75 gpm water at a maximum temperature of 75°F is provided.

3.13.3.6 Transfer Room. This room is located in the pad structure and houses the electrical and instrumentation switchgear, for interface with the Control Room.

3.13.3.7 Control Room. The Control Room is located on the second floor of the LC 16 blockhouse. It houses and provides protection to operating personnel during a static firing test.

The blockhouse is a circular reinforced concrete domed building five feet thick. An earth overburden, protected by gunite, covers the entire dome. The second floor has an approximate area of 4,300 square feet. The first floor of the blockhouse is not used.

3.13.3.8 Services. Electric power, water and gaseous nitrogen are supplied to the complex through the facilities of CKAFS.

4.0 ADMINISTRATIVE, ENGINEERING, AND GENERAL INDUSTRIAL AREA

This area of MILA contains the general industrial support facilities. These facilities include administrative, engineering, maintenance, supply, and storage buildings. See Figure 4.0-1A and 4.0-1B.

4.1 CENTRAL INSTRUMENTATION FACILITY (CIF)

4.1.1 Function. The Central Instrumentation Facility accomodates electronic equipment (e.g., computer, telemetry, etc.), labs, shops, office, data analysis and display areas, antennas, and other functions required for operation and support of the Saturn V/Apollo Program.

4.1.2 Location. The Central Instrumentation Facility (See Figure 4.0-2) is comprised of the Central Instrumentation Building, Antenna Site, and Operations Building. The Central Instrumentation Building is located in the MILA-Industrial Area on Goddard Avenue. The Antenna Site and Operations Building are located approximately 3/4 mile east and 3/4 mile north of the Central Instrumentation Building in an RF quiet zone to minimize RF interference from MILA equipment.

4.1.3 Description. The Central Instrumentation Building is a three-story structure of approximately 134,000 square feet. Operations conducted in this building require air conditioning and humidity control, elevated false floors, and suspended acoustic tile ceilings.

The primary power for this facility is a 13.2 KV industrial feeder and a 13.2 KV instrumentation feeder. The industrial feeder is stepped down to 120/208 V and distirbuted to distribution panels for lights and miscellaneous power loads. A separate line off the industrial feeder is stepped down to 277/480V for use in running the building air conditioning equipment and the motor generator sets that supply the test panels, throughout the building, with 28vdc and 120 VAC, 400 cycles.

M6-38	Bell Telephone Company Shed Parking
M6-88	Bell Telephone Company Work Center
M6-138	Communications Distribution & Switching Center
M6-336	Corps of Engineers
M6-339	Base Operations
M6-342	Information Systems
M6-399	Headquarters, J.F.K. Space Center
M6-486	Plant Maintenance
M6-493	Cafeteria
M6-495	Occupational Health
M6-589	Security
M6-595	Heat Plant
M6-695	Fire Station
M6-744	Supply
M6-791	Communications Maintenance & Storage
M6-794	Supply Warehouse
M6-881	GSA Motor Pool
M6-894	Paint & Oil Storage
M6-895	Sewage Treatment
M6-896	Water Storage
M6-996	Electric Station
M7-351	Personnel Training
M7-451	Sewage Lift Station No. 1

BUILDING LEGEND TO
Figure 4.0-1B

Figure 4.0-1A

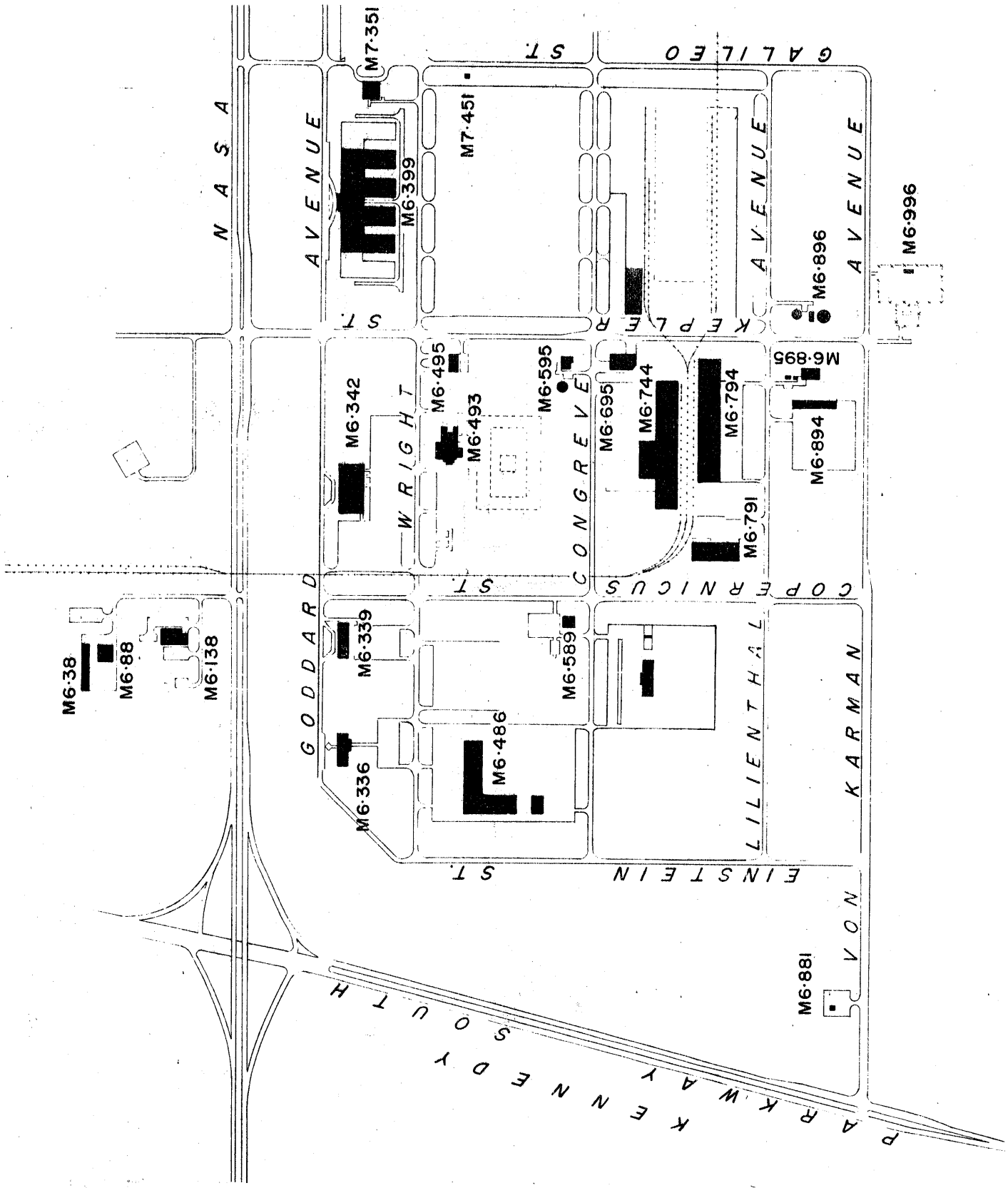

Merritt Island Industrial Area - Administrative and Support
Figure 4.0-1B

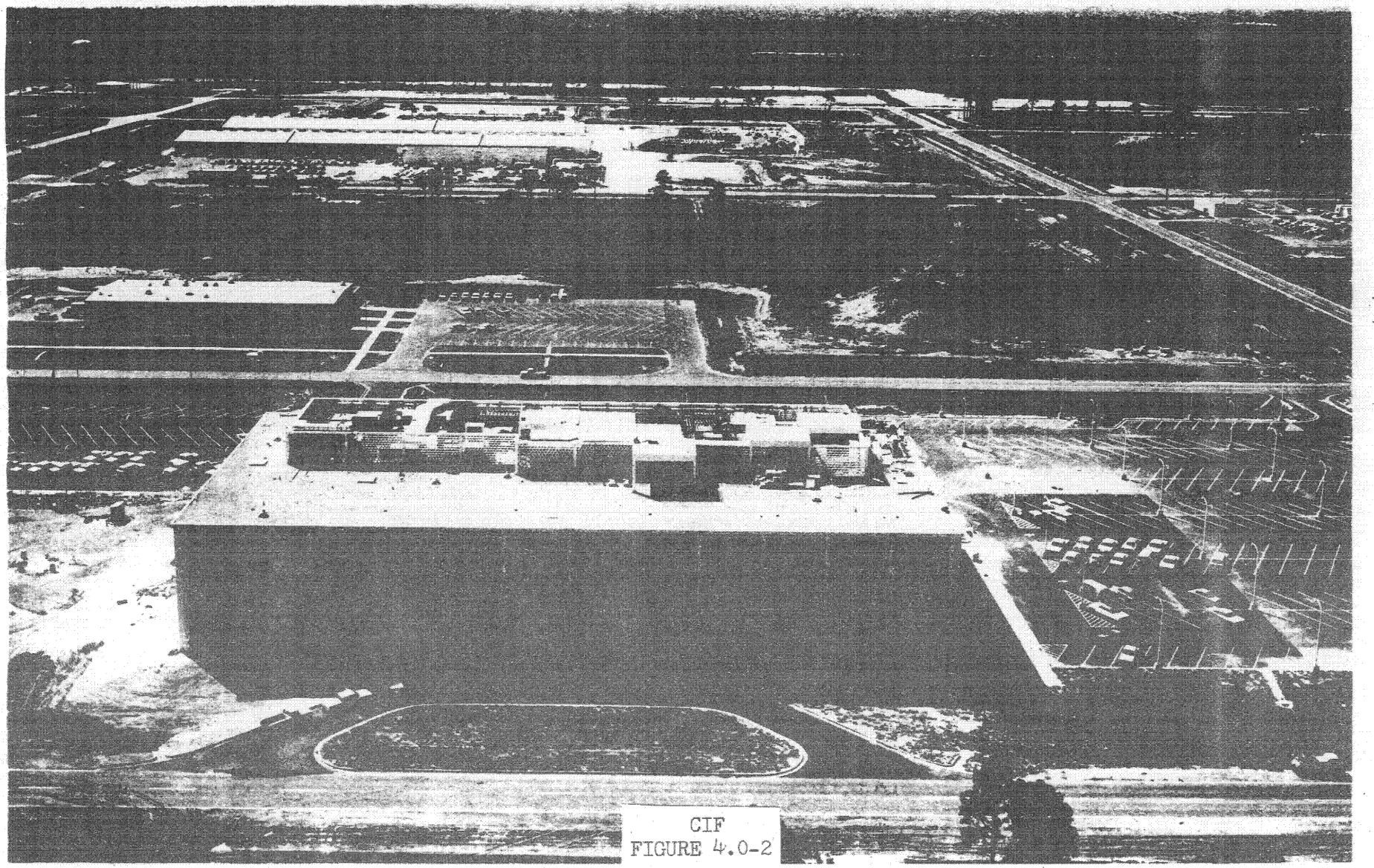

CIF
FIGURE 4.0-2

The instrumentation feeder is stepped down and distributed as 120/208V. The roof of the CIF will have an array of telemetry and flight television antennas.

Antennas of the CIF antenna field are used to acquire Telemetry, flight television, and vehicle tracking signals. A small building (See Figure 4.0-3) contains antenna control, receiving equipment, and several antenna systems.

The gain and sensitivity features of the antenna systems provide a capability for work in areas of general data improvement, applied research in electronic tracking techniques, plane plasma noise studies, and flight TV and Telemetry technology.

The Antenna Field also supports the UDOP-ODOP prototype tracking system, development of an experimental SDOP (S-band offset doppler) tracking systems, and support various RF tests performed at the launch pads.

Other antenna systems at the Antenna Field include arrays of barrel-type antennas for the 136 MC Minitrack satellite tracking system, helix antennas for general-purpose test work, communication antenna, parabolic antennas, and an array of special-purpose antennas.

4.2 COMMUNICATIONS DISTRIBUTION AND SWITCHING CENTER

4.2.1 Function. The Communications Distribution and Switching Center houses the wide band amplifier equipment, administrative telephone switching equipment, telephone switch board, and interface equipment between NASA and Southern Bell Telephone and Telegraph Company.

4.2.2 Location. The facility (See Figure 4.0-4) is located in the Merritt Island Industrial Area, north of NASA Parkway.

4.2.3 Description. The facility consists of a one story building, approximately 94 feet by 161 feet.

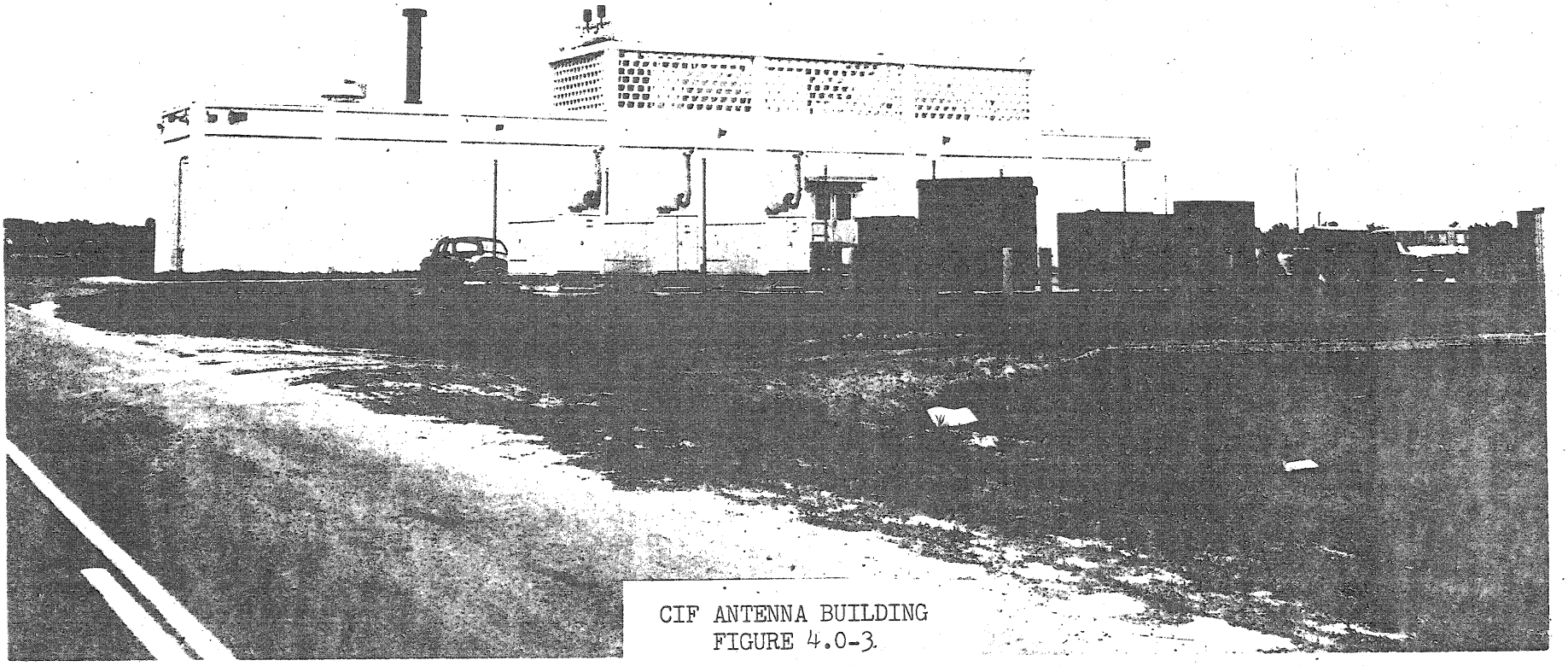

CIF ANTENNA BUILDING
FIGURE 4.0-3

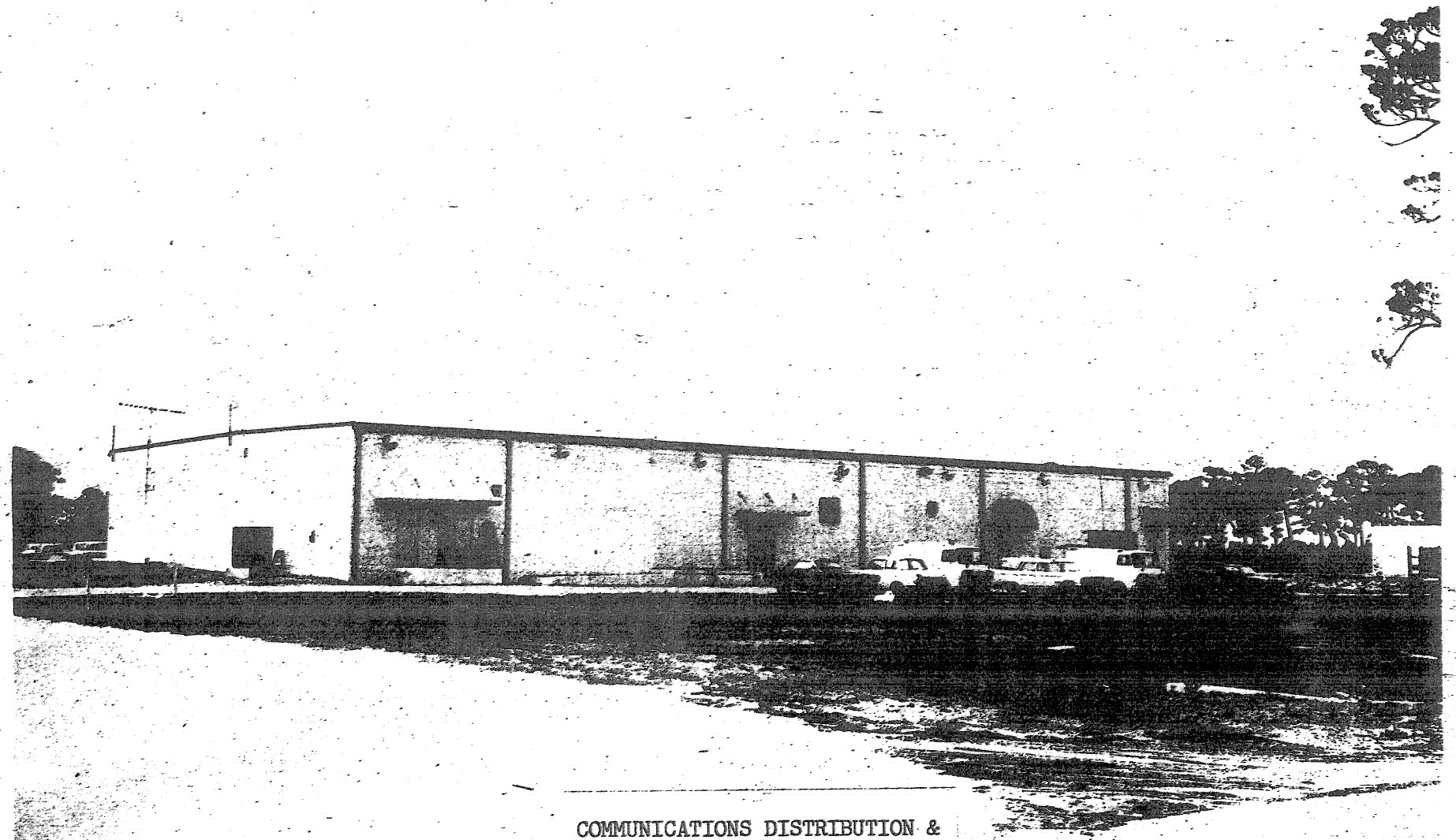

COMMUNICATIONS DISTRIBUTION &
SWITCHING CENTER
FIGURE 4.0-4

The building is partitioned into administrative offices, switchboard room, main frame room, switching equipment room, wide band room, carrier room, battery room, rest rooms, and mechanical equipment room.

4.3 VEHICLE MAINTENANCE FACILITY

The Vehicle Maintenance Facility provides for the lubrication, motor tune-up and minor repairs of NASA vehicles. This facility is composed of the GSA Service Facility and Heavy Equipment Shop.

4.3.1 GSA Service Facility

4.3.1.1 Function. This facility is for conducting motor pool operations, fueling, preventive maintenance and repair of all light vehicles assigned to NASA, and controlled by GSA (e.g., cars, taxis, buses, light trucks, etc.).

4.3.1.2 Location. This facility is located in the Merritt Island Industrial Area on Von Karman Avenue.

4.3.1.3 Description. The Facility consists of a two-story building which is flanked on both sides by one-story service buildings, encompassing a total area of 17,500 square feet.

The two-story center structure is 66 feet wide; 70 feet deep, of reinforced concrete frame and concrete block construction. Office areas are air conditioned. It contains the following:

a. 1st Floor - Offices, Dispatch Office, Driver Ready Room, Locker Room, Tool Room, Supply Room, Battery Room and Tire Room.

b. 2nd Floor - General office area.

Each of the wings that flank two sides of the center structure are 70 feet wide by 59 feet deep. They are of concrete block construction with open web steel joists and built-up roofing. Four service bays per wing or a total of eight service bays are each equipped with overhead service doors 10 feet wide by 14 feet high.

4.3.2 Heavy Equipment Shop

4.3.2.1 Function. This facility is used for the performance of preventive maintenance and repair of heavy equipment (e.g., road-scrapers, bull-dozers, mobile cranes, forklifts, ground power units, searchlight trailers, etc.)

4.3.2.2 Location. The Heavy Equipment Shop is located in the Merritt Island Industrial Area, east of Einstein Street and south of Wright Avenue.

4.3.2.3 Description. This facility, 100 x 60 feet, is constructed of steel framing with concrete block curtain walls. An area of approximately 1000 square feet is assigned for office space; and the remaining 5000 square feet for maintenance and repair. The maintenance area is equipped with heavy-duty hydraulic lifts and air hoses to operate maintenance tools. Three sides of the maintenance and repair area of the building are equipped with overhead service doors 10 feet by 14 feet high. The clear height of the repair area, floor to bottom of ceiling joists, is 16 feet.

4.4 PLANT MAINTENANCE FACILITY

4.4.1 Function. This plant is used as a central shop for the dispatching of facilities maintenance crews. The facility has provisions for the following shops: roads and grounds, sheet metal, welding, machine and mill wright, plumbers, parts and tool crib, air conditioning and refrigeration, electrical, high voltage, painters, carpenters and masons. Also, there are facilities for janitors, offices, locker and washrooms, storage and salvage area.

4.4.2 Location. The Plant Maintenance Facility (See Figure 4.0-5) is located in the KSC section of the Merritt Island Industiral Area east of Einstein Street and south of Wright Avenue.

4.4.3 Description. This facility is an "L" shaped structure comprising 60,000 square feet of floor space of which 52,000 square feet is shop maintenance

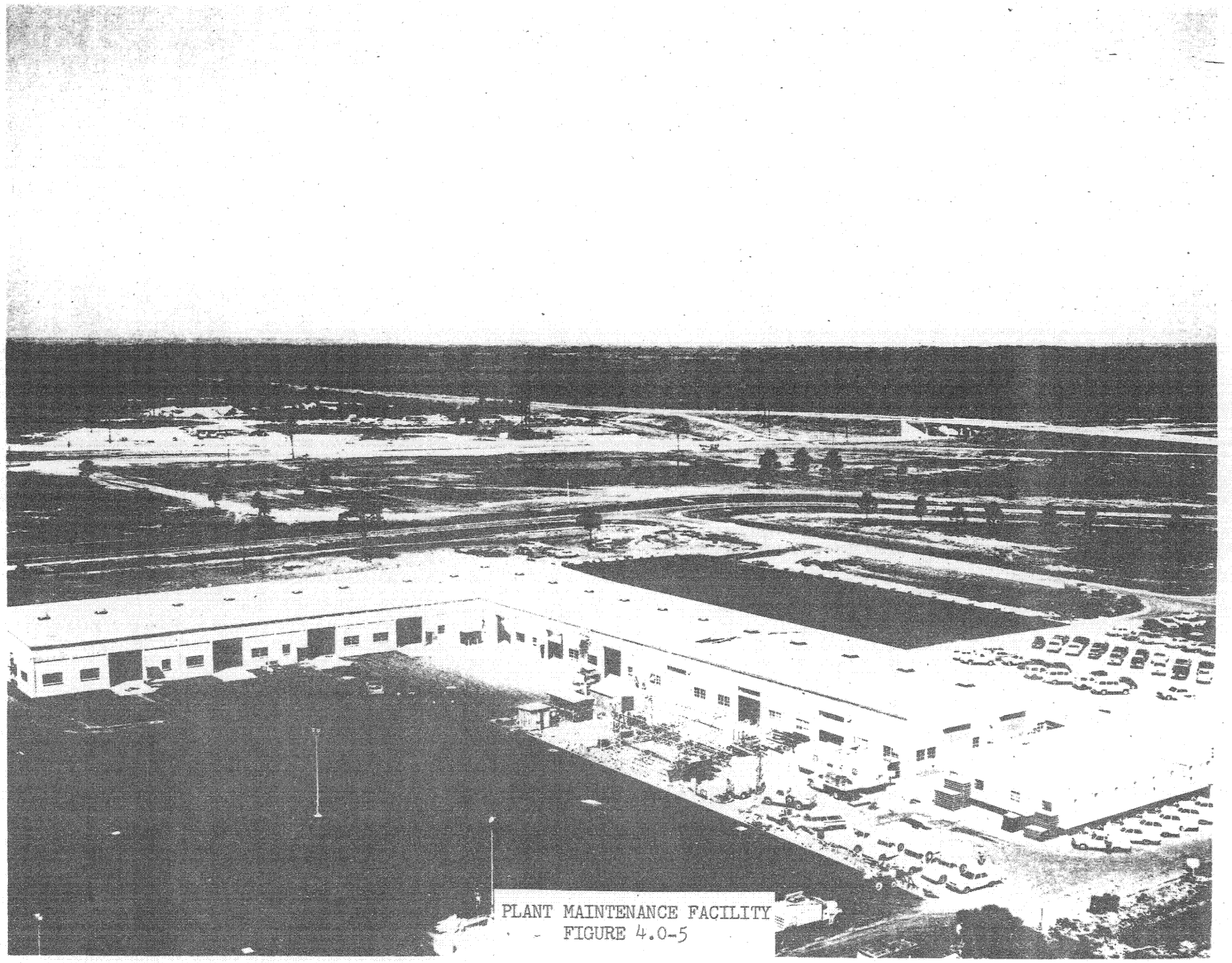

PLANT MAINTENANCE FACILITY
FIGURE 4.0-5

area and the remaining 8,000 square feet is offices and services. The construction is steel frame and concrete block with concrete floor. The minimum shop clearance, floor to ceiling joist is 17 feet. The building is serviced by roll-up doors 14 feet wide by 14 feet high. The facility has high pressure air available for lifts, air hoists, etc. Air supply will have capacity of 100 cfm at 125 psig operating pressure. In addition, the facility will have a 19,125 square feet storage and salvage yard which will be paved and enclosed by a 6 foot chain link fence. Within this area will also be a storage and salvage office (120 square feet).

4.5 MIIA HEAT PLANT

4.5.1 Function. The Heat Plant furnishes high temperature hot water as the heating median to most of the building of MIIA.

4.5.2 Location. The Heat Plan (See Figure 4.0-6) occupies the northwest corner Congreve Avenue and Kepler Street in the Merritt Island Industiral Area.

4.5.3 Description. This facility is composed of three structures: (1) Heat Plan, (2) Operational Oil Storage Tank and, (3) Bulk Oil Storage Tank. The Heat Plant is equipped with two 40,000,000 BTU/hr/boiler oil-fired, hot water generators. The hot water is circulated to the MIIA buildings at a pressure of 250 psig and a temperature of 400°F. Heat exchangers in each building furnish heat to closed loop systems as required. The storage capacity of the two tanks for #6 oil are as follows: (1) 10,300 gallons, Operational Oil Storage Tank, (2) 173,000 gallons, Bulk Oil Storage Tank. Provisions have been incorporated in the design and construction of this plant for the future addition of a third hot water generator.

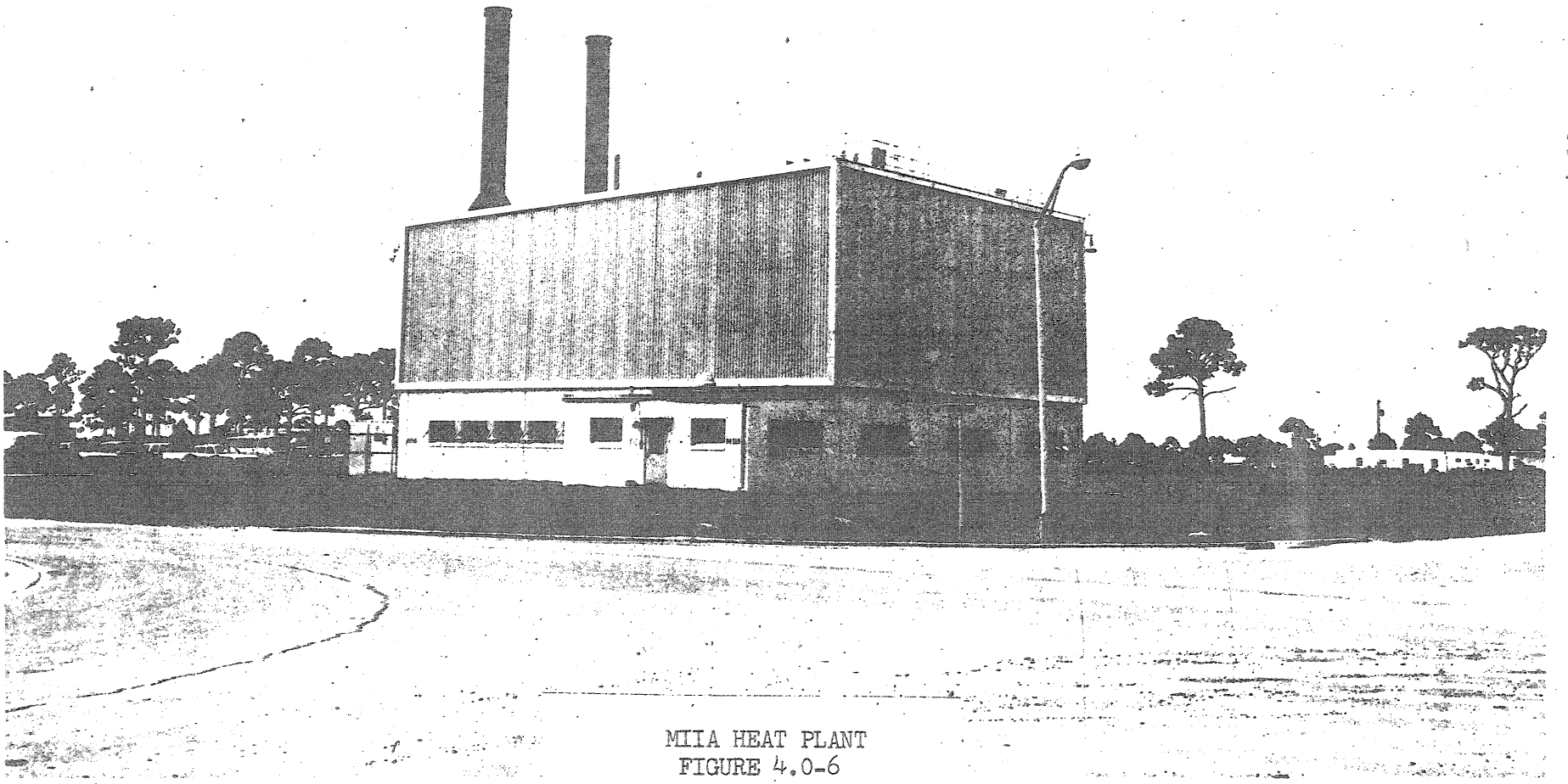

MIIA HEAT PLANT
FIGURE 4.0-6

4.6 MIIA SEWAGE TREATMENT PLANT

4.6.1 Function. The sewage plant receives and treats sewage and waste from most of the buildings at MIIA.

4.6.2 Location. The Sewage Plant (See Figure 4.0-7) is located at Lilienthal Avenue and Kepler Street in the Merritt Island Industrial Area.

4.6.3 Description. This facility consists of the Sewage Plant, Lift Stations, and a network system of underground collection pipes. The underground system consists of both gravity and force mains. These mains converge at Lift Station #5, located adjacent to the Sewage Plant for pumping into the Sewage Treatment Plant. The Sewage Treatment Plant provides primary treatment with a sludge gas burner. This plant is designed to treat 0.37 million gallons per day.

4.7 MIIA WATER SYSTEM

4.7.1 Function. The MIIA Water System consisting of water treatment, storage and distribution lines provides industrial water, fire control water, and potable water to facilities located on MIIA.

4.7.2 Location. The water system storage (See Figure 4.0-8) and treatment facilities are located south of Lilienthal Avenue and east of Kepler Street.

4.7.3 Description. Water for the Merritt Island Industiral Area is obtained from the City of Cocoa, Florida. A 24-inch main is located on the east side of the Kennedy Road that borders the west side of MIIA.

The MIIA system takes off of the 24-inch main at the intersection of Merritt Island Road and Fifth Street. A 14-inch main runs from this point to the water storage area. This area is located on the east side of "C" Avenue between Fourth Street and Fifth Street.

There are two water storage tanks located in the storage area. One is a 250,000 gallon elevated tank. The bottom of this tank is 100 feet above the existing

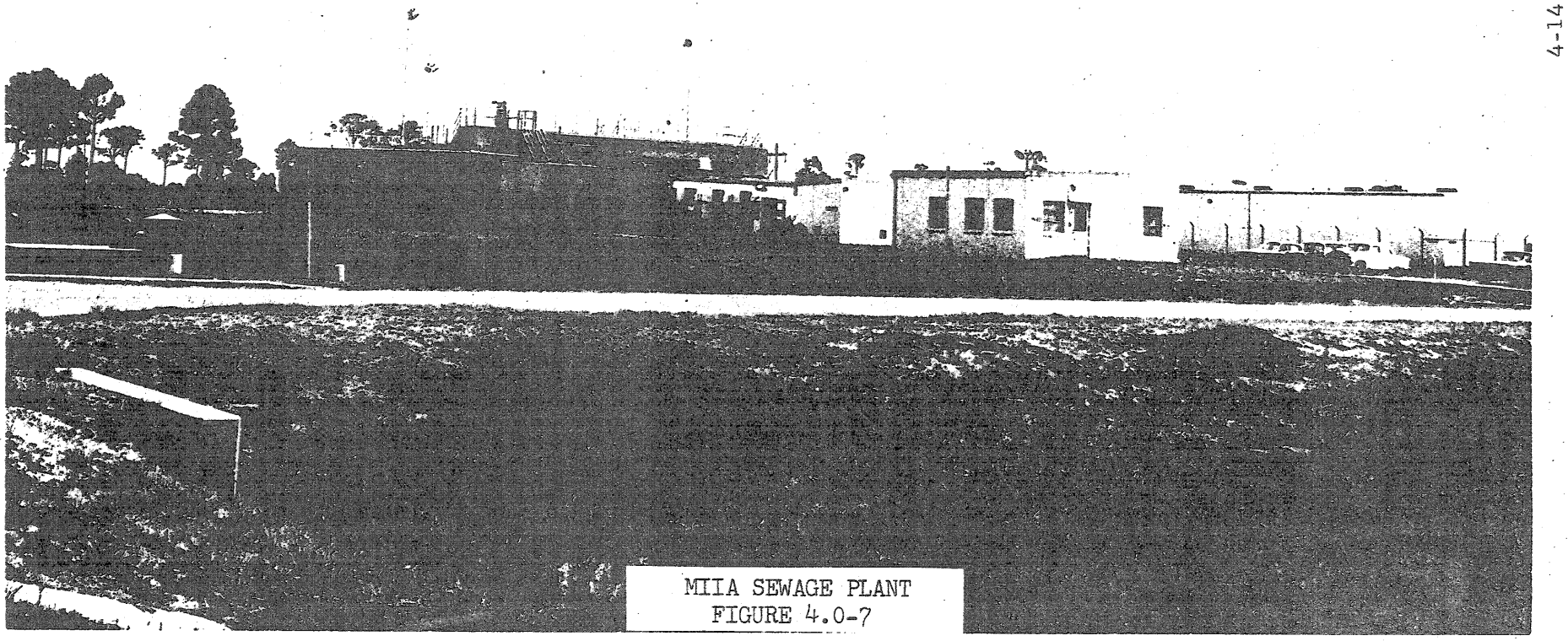

MIIA SEWAGE PLANT
FIGURE 4.0-7

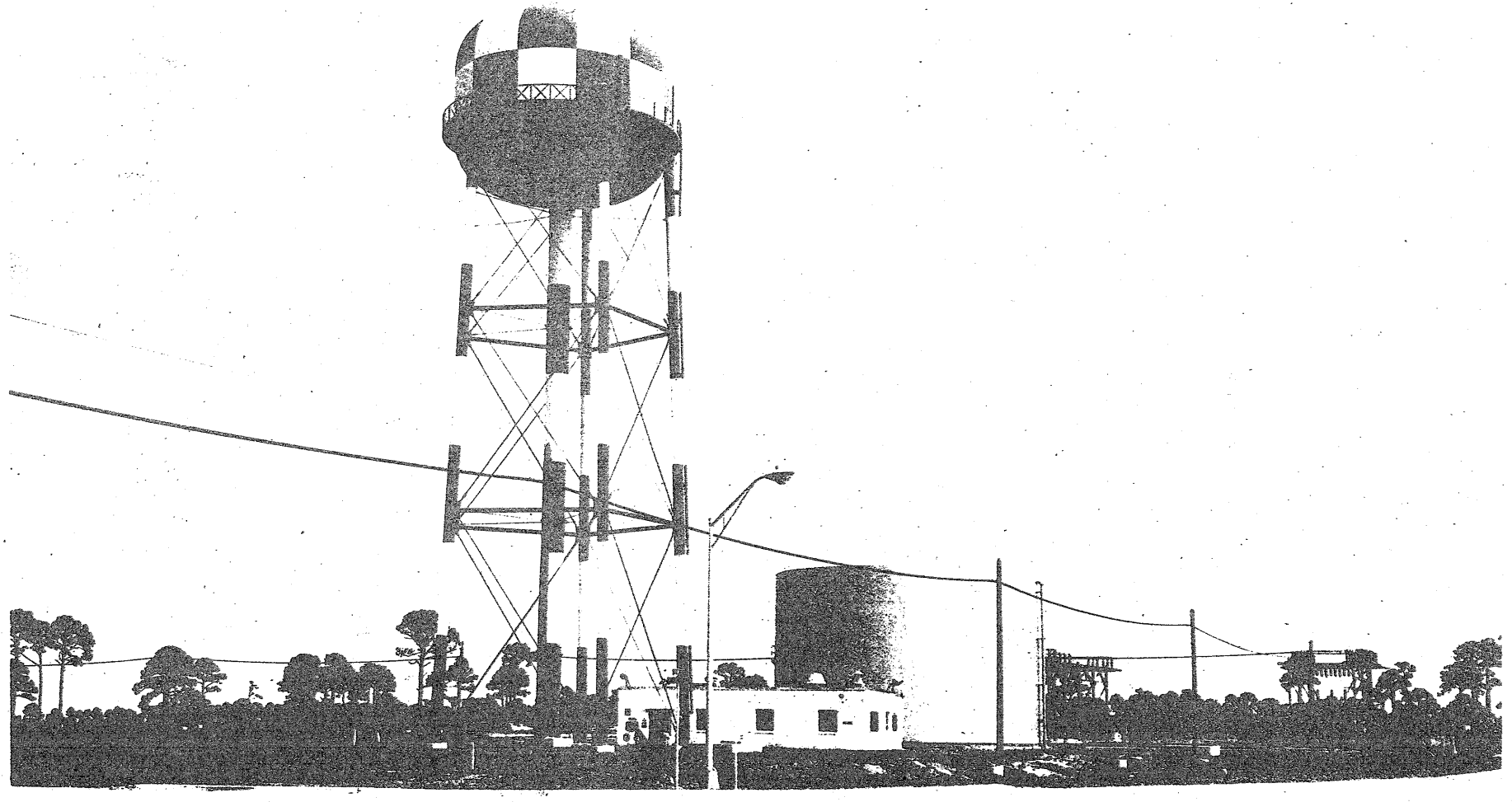

MIIA WATER STORAGE
FIGURE 4.0-8

ground elevation. This tank floats on the main and is filled through an altitude valve. The other tank is a 1,000,000 gallon ground reservoir. This tank is filled by a float control. Located at the storage tank area is a pump house with four gasoline engine-driven fire water pumps. The pumps are rated 1,000 gpm at 75 psi. Two of the pumps are manual start and two are automatic start that are actuated upon drop in pressure. These pumps are supplied from the 1,000,000 gallon ground reservoir. There are provisions to chlorinate all water coming from the reservoir. This system has the capability to allow water to be pumped from the reservoir back through the 24-inch main and feed LC39. During this period, MIIA is fed from the 250,000 gallon elevated tank. A looped system of underground pipes distributes water throughout MIIA.

4.8 MIIA ELECTRICAL POWER SYSTEM

4.8.1 Function. The MIIA Electrical Power System provides industrial and instrumentation power for the entire Merritt Island Industiral Area.

4.8.2 Location. The main substation is located south of Von Karman Avenue and east of Kepler.

4.8.3 Description. Power enters the main substation on MIIA from the west on a Florida Power and Light Company 69KV line. In the main substation, there are two transformers with a total capacity of 20,000 KVA for industiral use and two 2,500 KVA transformers for use with instrumentation equipment. Provisions were incorporated into the design and construction of the substation so that air circulating fans may be installed on the transformers. This will increase the substation capacity to 25,000 KVA industiral and 6,250 KVA instrumentation. Provisions were also incorporated for the future addition of two transformers, each rated at 10,000 KVA. Secondary distribution to substations within MIIA is by 13.2 KV lines. The main switching station is located adjacent to the main substation area. This single source serves the industrial and instrumentation requirements.

4.9 MIIA FIRE STATION

4.9.1 Function. This facility serves as the Central Fire Station for the Merritt Island Launch Area.

4.9.2 Location. The Central Fire Station (See Figure 4.0-9) is located on Congreve Avenue and Kepler Street in the Merritt Island Industrial Area.

4.9.3 Description. This facility is a single story structure, 9740 square feet, of concrete block construction. It houses three line type fire trucks, two base type fire trucks, the Central Fire Alarm Headquarters, and quarters for approximately forty fire department personnel. High temperature-high pressure hot water from the Central Heating Plant is utilized for heating this facility. Air conditioning is provided only for the offices, alarm watch room, personnel quarters, dining, and class room. A water and foam platform is located on the exterior of the building, adjacent to the base fire truck door. It is built at truck bed height and is protected by wood bumpers. This platform is equipped with an overhead valved 4" water outlet for quick filling of fire truck water tanks. A central automatic alarm system provided as part of this facility is located in the Alarm Watch Room. This system is coupled with alarm transmission systems from automatic detection systems provided in other buildings of MILA. Flashing stop lights with alarm bells are installed at the fire truck entrances to Third Street and "C" Avenue.

4.10 RAILROAD SYSTEM

4.10.1 Function. The railroad system provides support for the MILA heavy construction program with rail delivery of construction materials and for logistic support. The railroad system will also serve other Government agencies.

4.10.2 Location. The railroad is located on the Merritt Island Launch Area (MILA). It extends from the Marshalling Yard, which is west of Kennedy Parkway and north of Beach Road, through LC39 and the Merritt Island Launch Area.

4.10.3 Description. This is a standard railroad used to haul and provide logistic support.

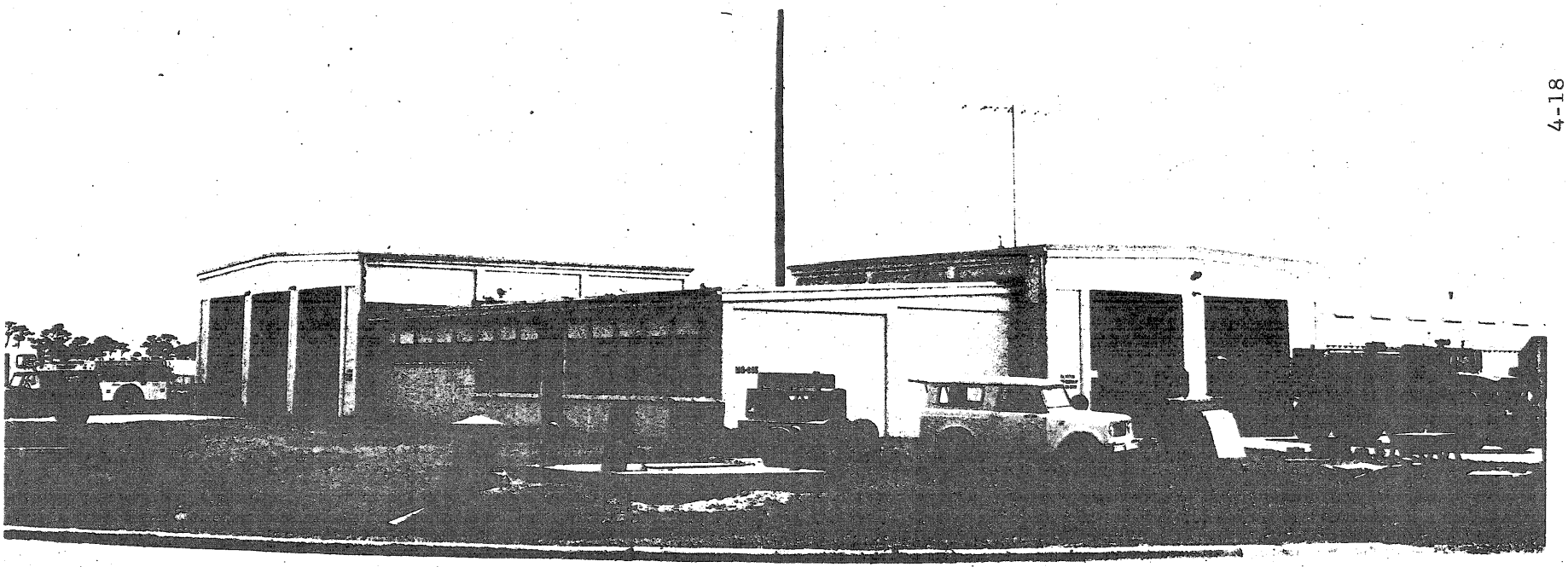

MIIA FIRE STATION
FIGURE 4.0-9

5.0 MERRITT ISLAND LAUNCH AREA - OTHER

This section of the document describes those facilities on MILA which provide support to the Apollo/Saturn V Program and which geographically are remotely located from MIIA and from LC-39. These items consist of Universal Camera Sites, Trailer Maintenance Facility, Propellant Systems Component Laboratory and Propellant Transporter Cleaning Facility.

5.1 UNIVERSAL CAMERA SITES

5.1.1 Function. The Universal Camera Sites provide support to cameras used for photographic documentation of the Saturn V/Apollo space vehicle launch and flight.

5.1.2 Location. Four Universal Camera Sites (UCS) are located on MILA. They are designated as UCS #12, UCS #13, UCS #15 and UCS #18. UCS #12 is located on the Cape Road approximately one mile southeast of Complex 39A. UCS #13 is located on the Beach Road approximately three miles west of Kennedy Parkway. UCS #15 is located on the west beach of the Banana River approximately two miles south of Complex 39A. UCS #18 is located on the Kennedy Parkway approximately two and one-half miles north of the NASA Parkway. Coordinates of the launch pads and the Universal Camera Sites are shown in Figure 5.0-1.

5.1.3 Description. The Universal Camera Sites support a ballistic camera and any one of the three following camera types.

a. Mobile Cinetheodolite Camera (MCC).

b. Mobile Optical Surveillance Tracker (MOST).

c. Intermediate Focal Length Optical Tracker (IFLOT).

The hard stands of the Universal Camera Sites are 20 ft. by 50 ft. reinforced concrete pads capable of supporting wheel loads of 10,000 pounds. One side of the pad has the capability of securing a MCC, MOST or IFLOT and the other side, a ballistic camera.

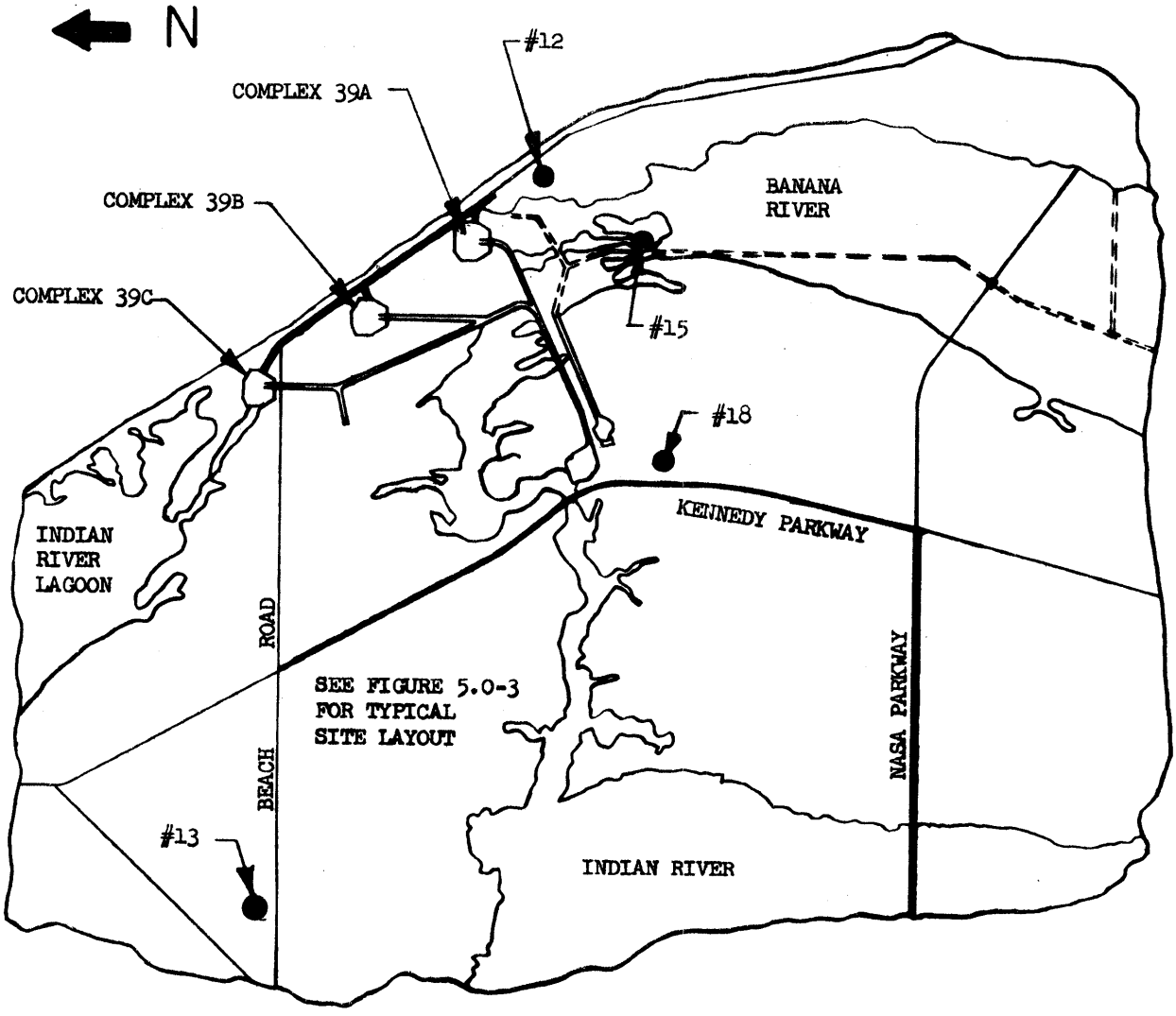

LAUNCH PAD & CAMERA SITE COORDINATES			
LAUNCH PAD & CAMERA SITE NO.	"X" COORDINATE	"Y" COORDINATE	ELEVATION
L.P. 39A	626,950	1,553,900	
L.P. 39B	621,560	1,560,750	
L.P. 39C	616,820	1,568,070	
UCS #12	637,770	1,551,500	15 FEET
UCS #13	581,000	1,566,400	15 FEET
UCS #15	625,620	1,542,920	0 FEET
UCS #18	611,820	1,537,530	15 FEET

● DENOTES UNIVERSAL CAMERA SITES

UNIVERSAL CAMERA SITES

FIGURE 5.0-1

The Ballistic "T" Pad is isolated from the rest of the pad with one inch isolating material. This provides isolation and drainage for the "T" pad from the rest of the universal pad. The ballistic camera is mounted on six "T" slots equally spaced at 60° around the survey marker near the center of the "T" pad. See Figure 5.0-2.

The MCC pads consist of concrete guides located so that a survey marker is at the center of the camera location at all times. These concrete guides also provide for stabilizing and isolating the cameras from all outside interference. This is done by lifting the camera off the camera transporter bed with screw jacks secured to the camera mount and to concrete guides. Three concrete foundations are provided for the support of the MCC collimator lens assemblies. These foundations are located approximately 17 feet from the MCC survey marker and with approximately 120° between each foundation. Similar provisions, except the foundations, are provided to support the target shield assemblies. The foundations for the collimator lens shields and for the target shields assemblies will maintain the shields in the vertical position, without permanent deflection, in winds of 125 miles per hour.

The equipment provided on each of the Universal Camera Sites is a unit substation, circuit breaker, a Universal Camera Control System (UCCS) power box, a UCCS communication box and a communications terminal cabinet.

The power provided to the sites is 13.2KV. The unit substations are rated for 37.5KVA, 3 phase, 4 wire, 13.2KV-120/208V. The UCCS power box is rated at 30 KVA, 120/208V, 3 phase, 4 wire. The power box is mounted on a concrete pedestal near the Universal pad, and has a weatherproof circuit breaker panel mounted behind it. The panel contains individual branch circuit breakers for

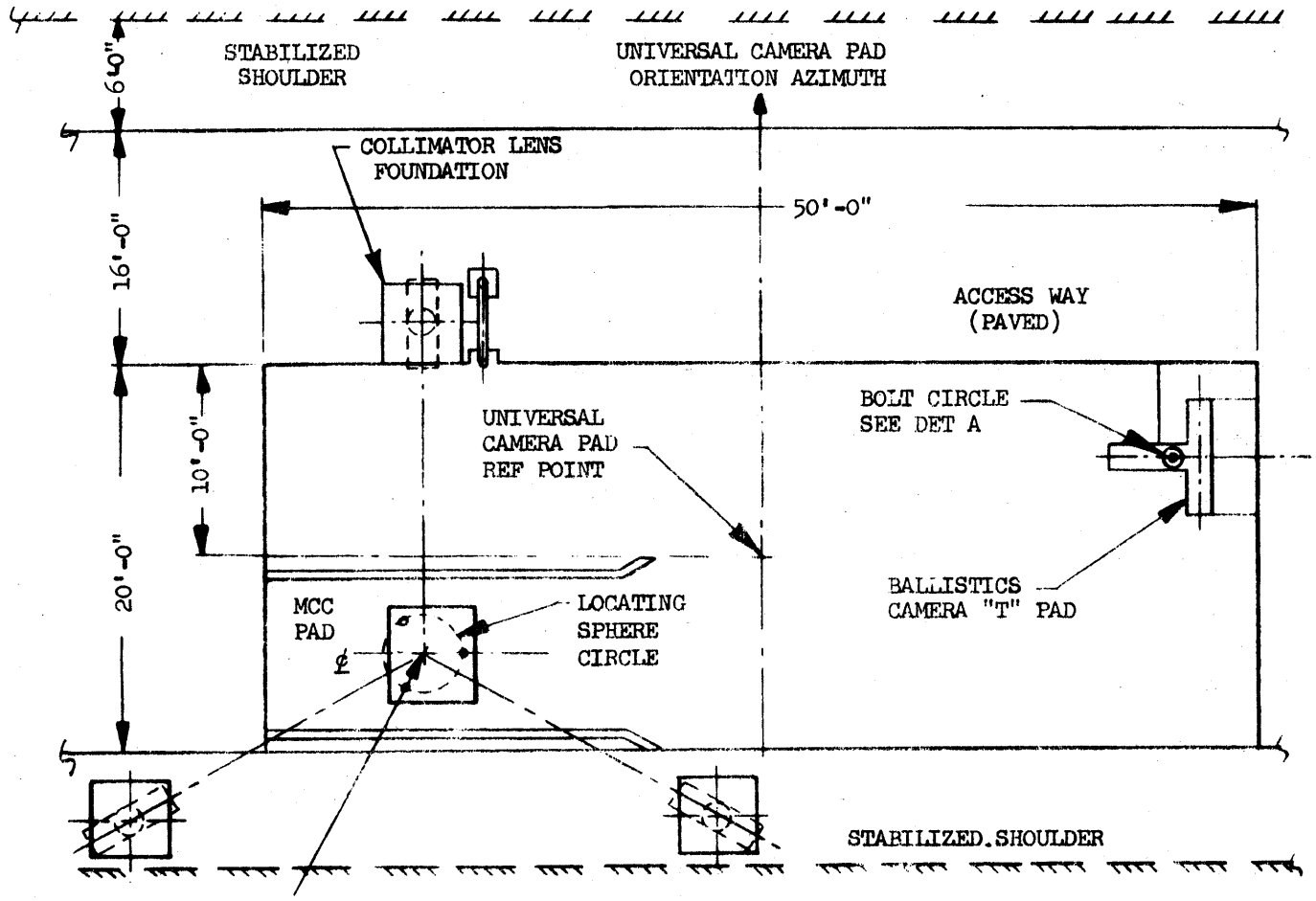

UNIVERSAL CAMERA SITE ARRANGEMENT PLAN

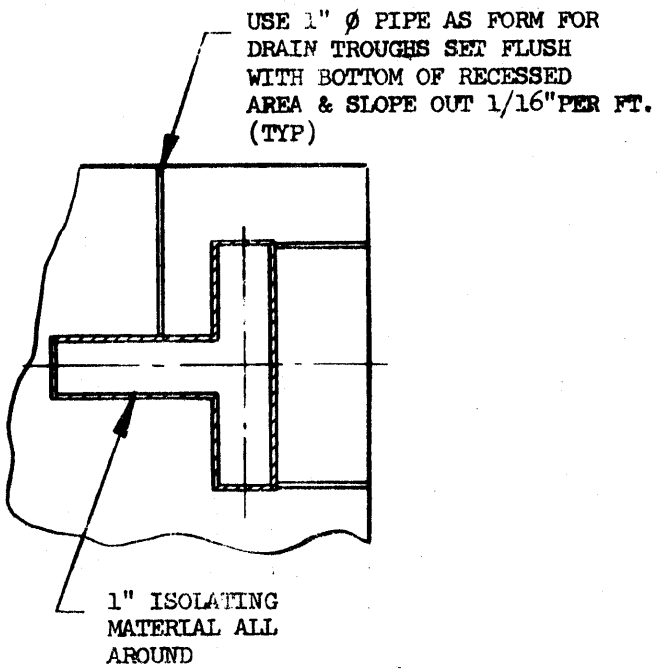

"T" PAD DRAINAGE PLAN

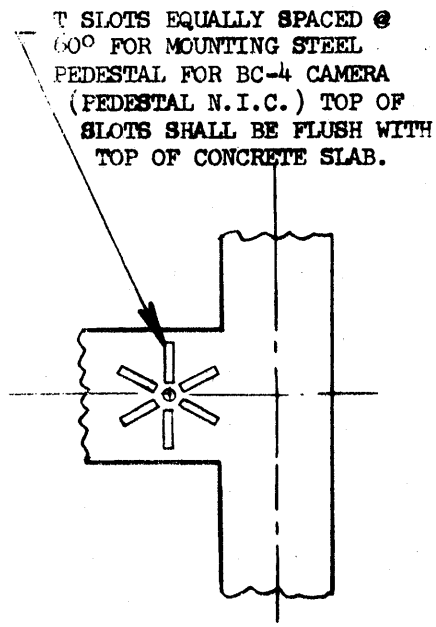

DET A
SURVEY MARKERS

FIGURE 5.0-2

each of the three MCC target lights and shield covers. The individual circuit breakers are sized for a 150 watt lamp in each target, and a maximum of 4 amps, 120 volt, single phase power for each shield cover motor.

A weatherproof communication terminal cabinet, mounted on a concrete pedestal near the pad, has three 4-inch conduits used for cable access to the pad communications system from the main arterial communications system. Cables are connected from the terminal box to the UCCS communication box, which provide the communications throughout the Universal Camera Site.

Cameras on Sites 12, 15 and 18 will be operated by remote control. Cameras utilizing Site 13 will be manually operated at all times.

A paved area is provided to and near the Universal Camera Sites for access and parking. (See Figure 5.0-3) See Figure 5.0-4 for typical siting criteria.

5.2 TRAILER MAINTENANCE FACILITY

5.2.1 Function. This facility is for the performance of exterior maintenance and repair of fuel transporter trailers (gasoline, RP-1, liquid cryogenics, UDMH, N_2O_4, etc.). This facility is a functional part of the Vehicle Maintenance Activity of the Merritt Island Industrial Area.

5.2.2 Location. Site has not been determined.

5.2.3 Description. This facility is comprised of the main structure, paved apron area and an exterior wash rack area. The structure is of concrete block construction with open web steel joist bridging and built-up roof. The structure measures approximately 80 feet by 60 feet. An area 20 feet by 60 feet will be utilized for offices, storage, and utilities. Three 20 foot by 60 foot bays are devoted entirely to repair activities. Each of these bays is equipped with a 10 feet wide by 14 feet high access door. In the repair area the clear

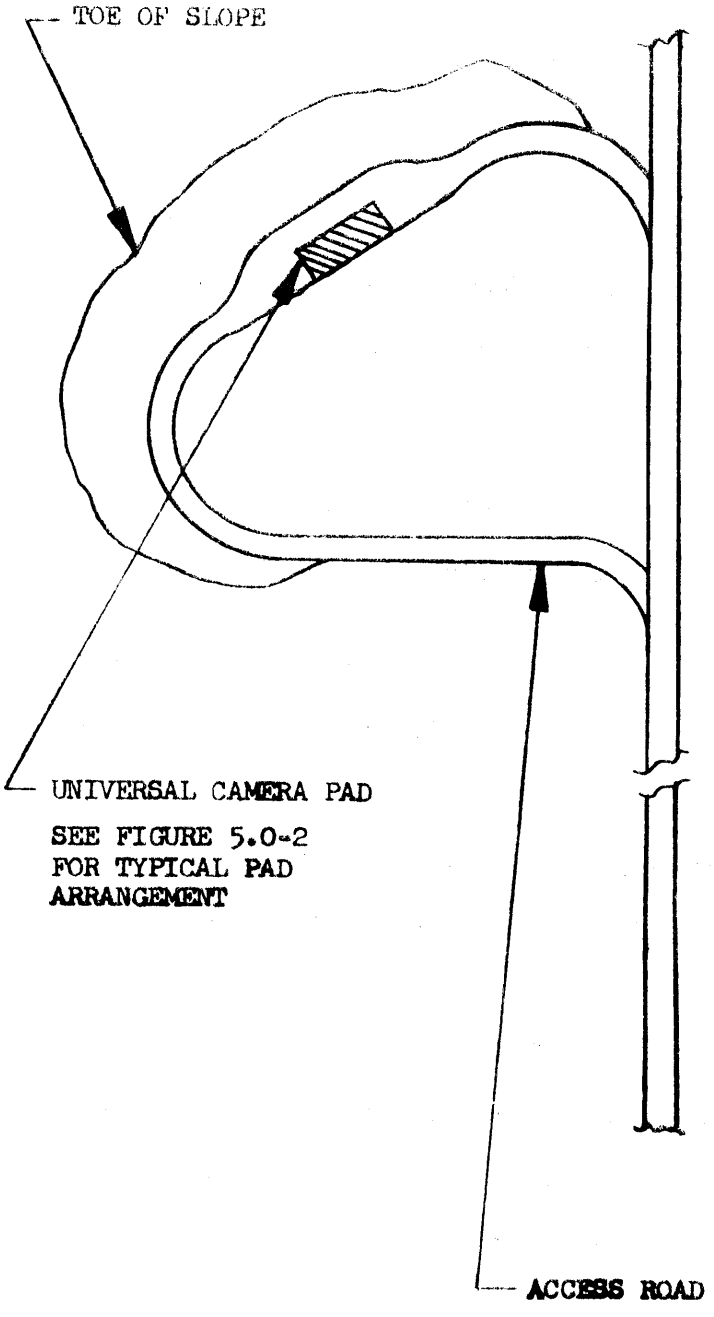

TYPICAL UNIVERSAL CAMERA SITE

FIGURE 5.0-3

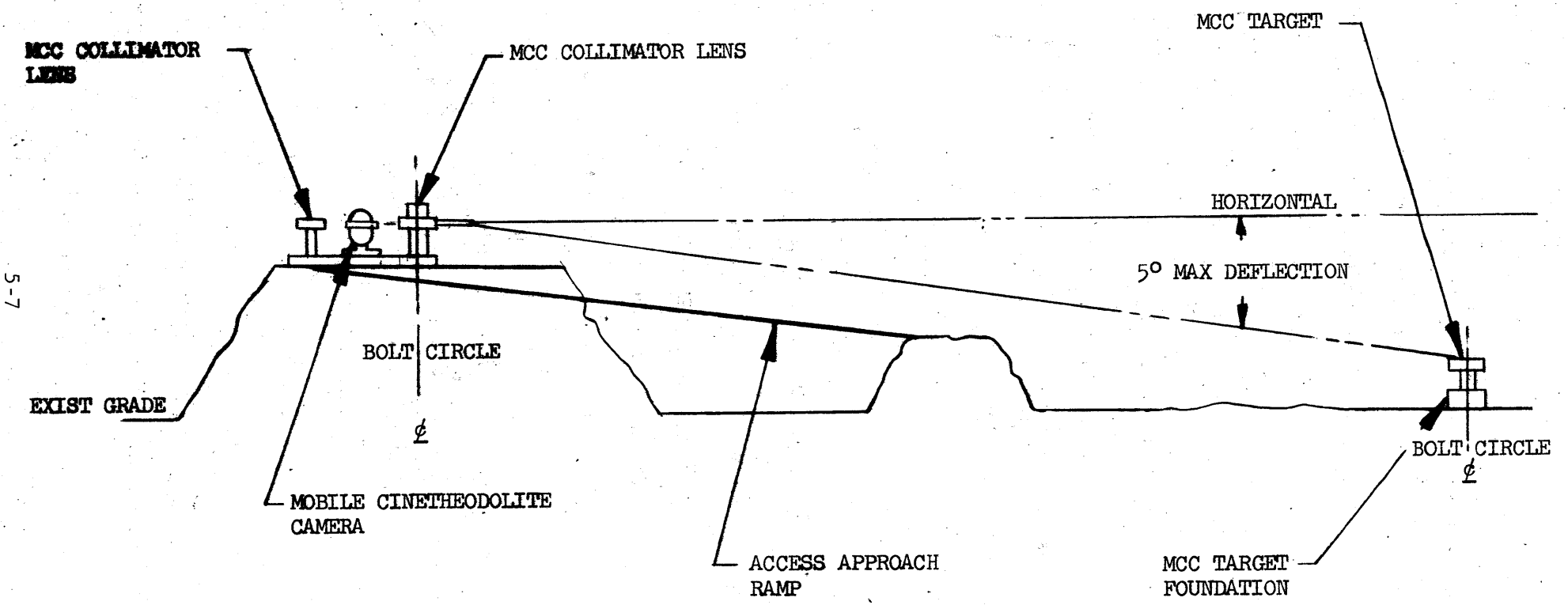

TYPICAL SITING CRITERIA CINETHEODOLITE CAMERA

FIGURE 5.0-4

height, floor to bottom of ceiling joists, is 16 feet. The repair area is equipped with lubrication equipment and compressed air. Preventive maintenance and repair to the fuel transporter will be restricted to the running gear (brakes, tires, lights, fifth wheel, exterior washing). A paved vehicle apron is common to this facility and the Propellant Systems and Components Laboratory.

5.3 PROPELLANT SYSTEMS COMPONENTS LABORATORY

5.3.1 Function. The Propellant Systems Component Laboratory provides propellant dispensing components, cleaning laboratory, test facilities, a mobile cleaning facility, a cleaning verification laboratory and a material testing/analysis facility.

5.3.2 Location. The Propellant System Components Laboratory (See Figure 5.0-5) is located on Beach Road and west of Kennedy Parkway.

5.3.3 Description. This facility is composed of cleaning laboratory, materials and testing building, and solvent storage area.

a. Cleaning Laboratory. The cleaning laboratory is constructed of concrete block with open web steel joist bridging and a built-up roof which encloses an area of 7,300 square feet. This building has suspended ceilings. Filtration and air conditioning equipment provide the controlled atmosphere required for servicing propellant systems components. A 2,870 square foot cleaning area contains two air locks, a 1,440 square foot clean room, and office space. The remaining 4,430 square feet is composed of two shops (600 square feet and 2,640 square feet), office space, wash room, and supply and storage areas. The shops are for the repair and inspection of propellant system components that pass through the facility.

b. Materials Testing Building. This building has air conditioning with controlled atmosphere. Construction is similar to the cleaning

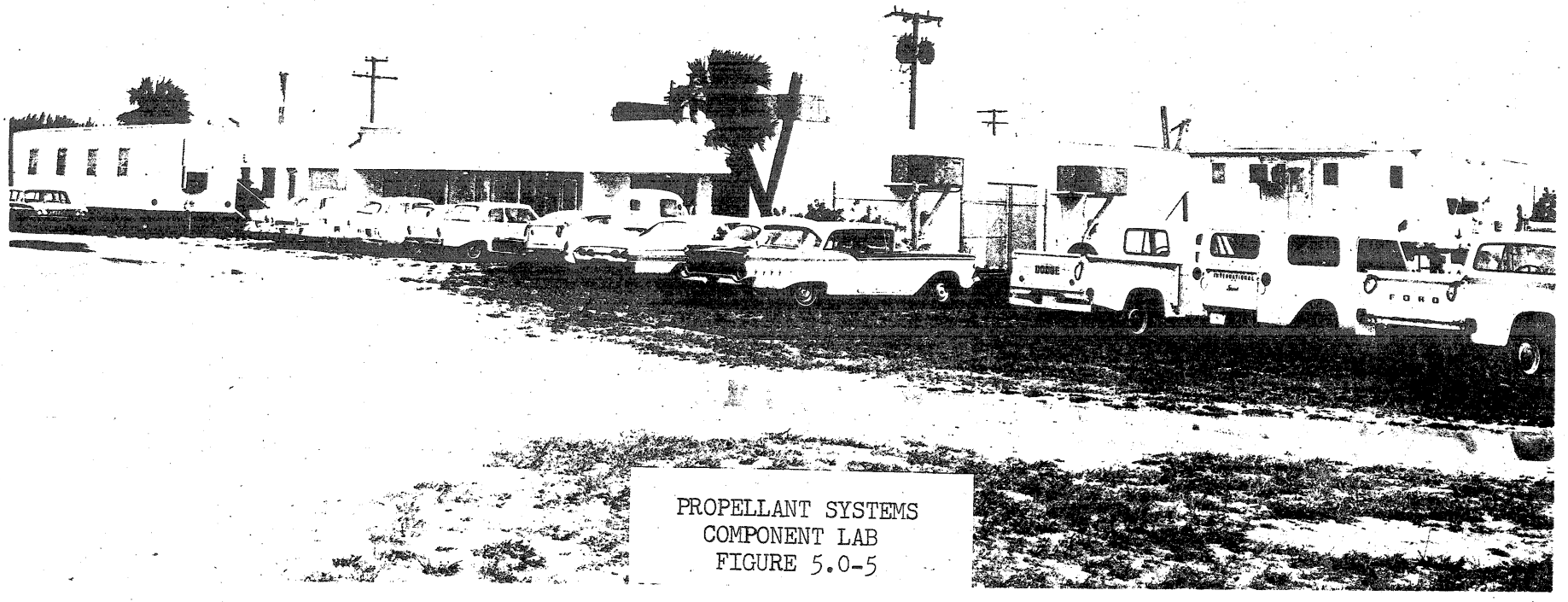

PROPELLANT SYSTEMS
COMPONENT LAB
FIGURE 5.0-5

laboratory. It is located approximately 20 feet west of the cleaning laboratory and encloses an area of 4,080 square feet. The largest room within this building is a mechanical testing area of 1,700 square feet. The remaining 2,380 square feet is composed of individual room areas for offices, mechanical lab, optical emission, X-ray emission and diffraction spectroscopy, LOX compatibility testing, metallograph, X-ray, X-ray processing, heat treat and salt spray test, material preparation, mechanics and washroom.

c. Solvent Storage Area. This facility is a 1,000 square foot building used for the drum storage of component cleaning solvents. Solvents (e.g., trichlorethylene, perchlorethylene, acetone) are piped from the drums to the cleaning areas. Through-the-wall piping allows insulated LOX trailers and tube bank trailers to be moved into position next to the building for direct supply of these items to use areas within the Materials Testing Building. LOX and gases are used to purge the cleaned items with the material with which it normally functions.

5.4 PROPELLANT TRANSPORTER CLEANING FACILITY

5.4.1 Function. This facility is for inside purging and cleaning of the propellant trailer/transporter tanks and for removal, repair, and replacement of propellant piping and piping equipment.

5.4.2 Location. Site has not been determined.

5.4.3 Description. The Propellant Transporter Cleaning Facility is constructed of concrete block with open web steel joist bridging and a built-up roof. The total area within the building is 4,800 square feet with a clear height (floor to bottom of ceiling joists) of 16 feet. There are four trailer/transporter bays, each of which is equipped with 10 foot by 14 foot exterior doors on one side. The cleaning facility contains 400 square feet of office space, 600 square feet of storage and utilities space, and 3800 square feet of work space.

6.0 EASTERN TEST RANGE SYSTEMS

This section describes the ETR systems which have an interface with MILA operations and which are located on MILA. These systems consist of RF system, AFETR Telemetry Station (Tel IV), and the Frequency Control and Analysis System. There are other ETR Systems which support MILA operations but they are not covered within this document.

6.1 RF SYSTEMS

Two ETR tracking radars are located on MILA. They are the AN/TPQ-18 (C-Band) and the High Resolution Trackers (X-Band). Position tracking data derived by these radars are transmitted on 3kc lines to the ETR Impact Prediction Computer.

The Impact Prediction Computer uses the MILA located radar data and other ETR radar data to derive trajectory information. Trajectory data and/or raw radar data can be transmitted by cable from the Impact Prediction Computer to the CIF.

6.2 AFETR TELEMETRY STATION (TEL.IV)

6.2.1 Function. Record and provide data to the CIF during pre-launch and launch phases.

6.2.2 Description. The basic ETR telemetry station (Figure 6.0-1) is composed of five groups of equipment as follows:

a. Antennas.

b. Receive and Record.

c. Data Separation.

d. Data Processing.

e. Display and Records.

The block diagram in Figure 6.0-2 shows the inter-relationships between individual equipment and equipment groups. All the equipment is connected or patched through

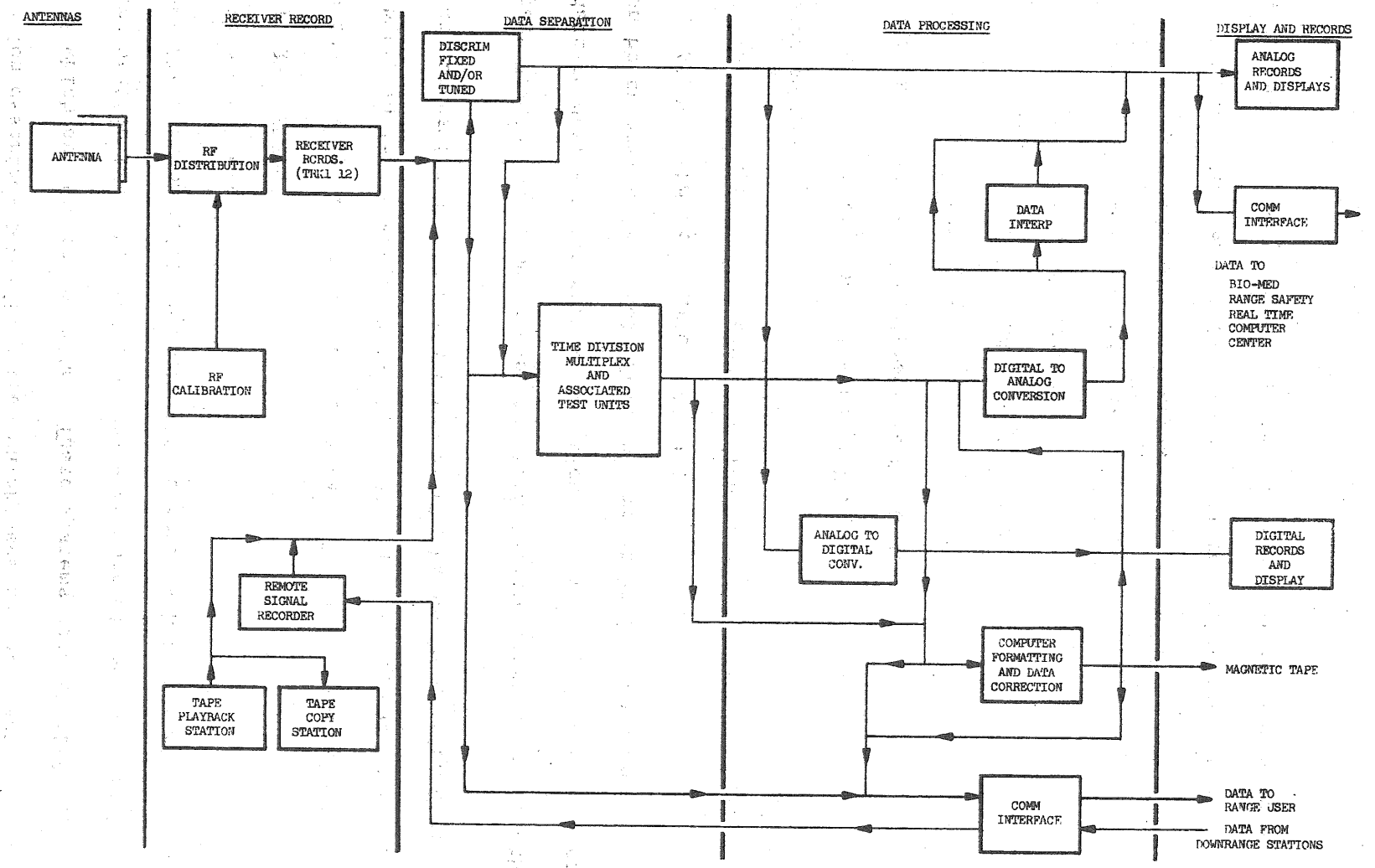

NTR BASIC TELEMETRY STATION DESIGN
FIGURE 6.0-1

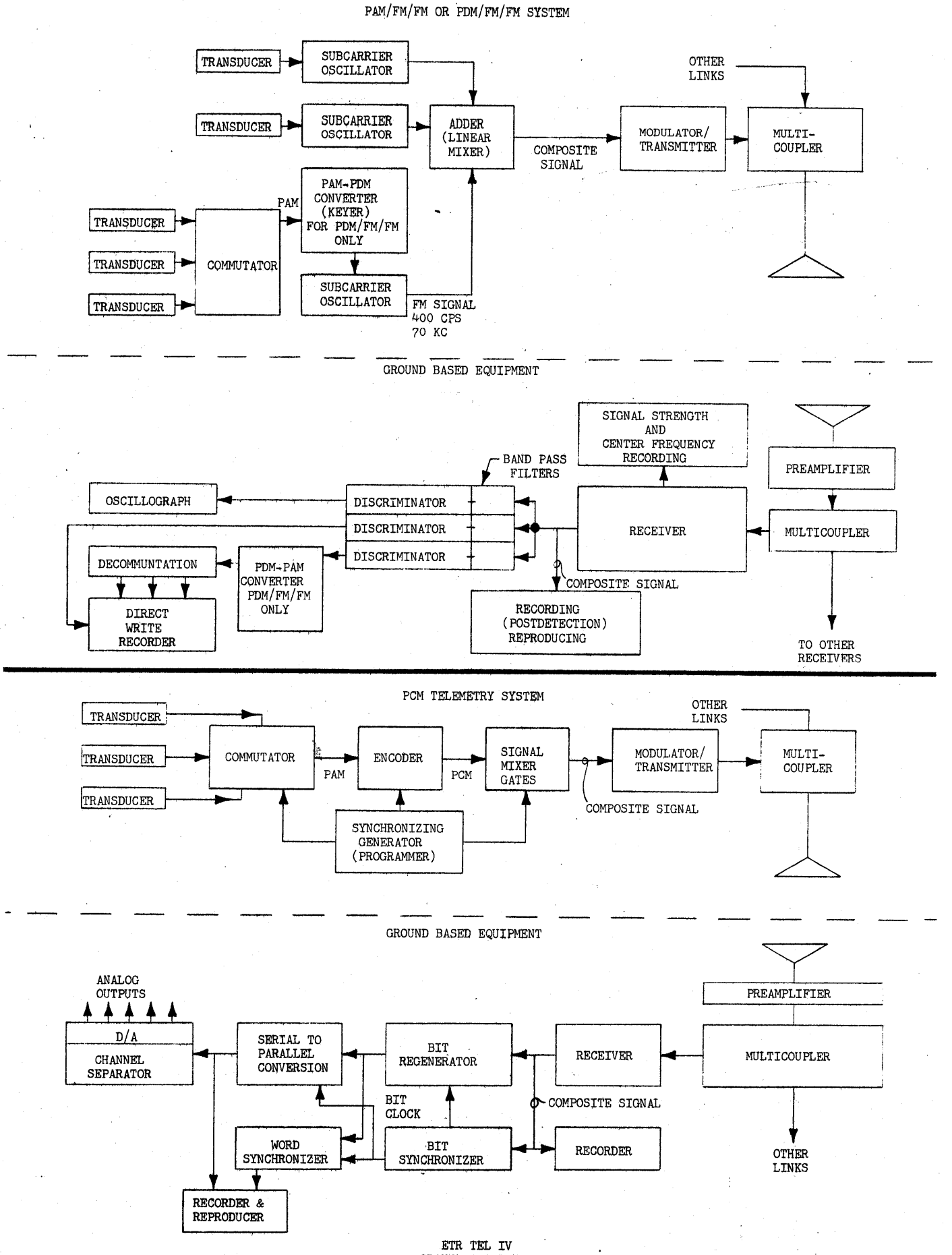

ETR TEL IV
GROUND STATION
BLOCK DIAGRAM

FIGURE 6.0-2

either video, analog or digital patching equipment. The station will have the capability to:

a. Receive electromagnetic energy in the band from 225 to 2300 mc using polarization diversity techniques.

b. Record and reproduce the received data in predetected form.

c. Demodulate the FM carrier in an optimum fashion using conventional and phaselock techniques.

d. Demultiplex a large variety of frequency division multiplex (FDM) and time division multiplex (TDM) signals. A common digital language output is derived from all the TDM equipment.

e. Convert demultiplexed information from an analog to a digital form or vice versa.

f. Visually display and/or record either analog or digital information.

g. Retransmit telemetry data from remote stations to MITS and distribute the data to Range Users.

Since MITS is the central telemetry control point for the ETR, it will have more capability than remote stations. MITS will provide magnetic tape formatting and data correction services tailored to the Range Users needs. Magnetic tape duplication services will also be performed at MITS.

6.3 FREQUENCY CONTROL AND ANALYSIS SYSTEM

6.3.1 Function. The aims of Frequency Control and Analysis (FCA) at AFMTC are to ensure interference free operations, to supply information on possible interfering transmitting sources and to give the operating characteristics of missile and ground support transmitters. Certain frequency bands are

monitored to prevent interference to test operations and to check whether or not AFMTC operational frequency assignments and schedules are maintained within their limits.

6.3.2 Description. The FCA facilities at ETR consist of fixed stations mobile, and semi-mobile vans. The means to bench check radar beacons has recently been added.

Two mobile vans are operational and a third is expected to be operational soon. The vans are equipped to monitor, direction-find (DF), analyze, obtain field intensities and fix operating frequencies. They are used on the pads during launches and on short notice, may be driven to any mainland site to make special measurements, or chase down interference sources.

Two of the mobile vans contain identical instrumentation. The third has improved instrumentation including complete beacon checkout for final go/no-go determination.

Fixed Station at MILA

Monitor	15kc to 10.75gc
Direction Finding	500kc to 10.75gc
Analyzing	500kc to 10.75gc
Field Intensity Measurements	15kc to 10.0gc
Frequency Measurements	1cps to 12.0gc (0.0001 percent)
Command Control Monitoring	406mc to 549mc
Command Function Recording with Timing	
Audio Recording	
Signal Recording with Timing	
Two Way Radio Communication with Vans	
Bench Checkout of Radar Beacons	

Mobile Vans

Monitor	500kc to 10.75gc
Analyzing	500kc to 10.75gc
Direction Finding	90mc to 10.75gc
Field Intensity Measurements	150kc to 1.0gc
Frequency Measurements	200kc to 12.0 (0.001 percent)
Audio Recording	
Signal Recording with Timing	
Two Way Radio Communication with Fixed Station	
Beacon go/no-go Checkout (one van)	

7.0 FACILITIES REFERENCE MATERIAL INDEX

This index furnishes information whereby interested persons may locate additional material pertinent to the facilities and systems described in this document.

The columns are headed as follows:

Item No.:	Refers to paragraph in this document where the facility or system is discussed.
Name:	Self-explanatory.
Project No.:	The NASA/KSC funding project number.
Design Criteria:	The number and date (if available) of the criteria prepared either by or for NASA.
Contract No.:	The procurement contract issued by the Corps of Engineers (NASA 10 or ENG 36) or by NASA/KSC Procurement (NAS10-0716).
Construction Spec. No.:	Self-explanatory.
Construction Drwg. No.:	Self-explanatory.
Building No.:	The permanent number assigned to the facility.

Item No.*	Name	Project No.	Design Criteria No.	Design Criteria Date	Contract No.	Construction Spec. No.	Construction Drwg. No.	Bldg. No.
1.1	Vehicle Assembly Building							K6-848
	Foundations	7620	-----	10/22/62	NASA10	63-44	D0203-28, 340	
	Structural Steel	7620	-----	10/22/62	NASA8	63-41	D0203-28, 297	
	Outfitting	7620	-----	10/22/62	NASA61	64-13	D0203-28, 297	
1.2	Barge Terminal							
	Access Canal & Basin	7620	-----	9/5/62	NASA1023	63-18	D0207-27, 936	
	Dock Facility	7620	FA057	—	NASA3	63-43	D0203-28, 274	
		7620	-----		NASA177		D0203-28, 300	
1.3	Launch Control Center	7620	-----	10/22/62	NASA61	64-13	D0203-28, 297	K6-900
1.4	Utility Annex	7620	-----	10/22/62	NASA61	64-13	D0203-28, 297	K6-947
1.5	Sewage Treatment							
	VAB Area	7620	0569, 0694, 0695	11/16/62	NASA61	64-13	D0203-28, 297	K6-792
	Pad "A"	7620	0686	12/19/62	NASA48	64-9	D0203-102	J8-1705
1.6	Paint and Oil Storage							
	VAB Area	7620	0569, 0694, 0695	11/16/62	NASA61	64-13	D0203-28, 297	K6-996
1.7	Launch Equipment Shop	7648	2529	2/4/64	NASA144	65-19	D0203-232	K6-1247
1.8	Ordnance Storage Area	7620	0867	10/13/63	NASA163	65-28	D03-198	K7-506
1.9	Mobile Launcher							
	Structure	7620	------	--------	NAS10-0716	LOC39-001	75M05120	
	Mechanical & Electrical	7620	------	--------	NAS10-1101	LOC39-002	75M05121	
1.10	ML Refurbish Area							
	Erection Area	7620	0569, 0694, 0695	11/16/62	NASA3	63-43	D0203-28, 274 & 203,28, 300	
	Refurbish Outfitting	7620						
1.11	Crawler/Transporter	7620	-----	--------	NAS10-1477	-----	75M05760 thru 75M05772	

*Item No. refers to paragraph where discussed.

Item No.*	Name	Project No.	Design Criteria No.	Design Criteria Date	Contract No.	Construction Spec. No.	Construction Drwg. No.	Bldg. No.
1.12	Crawlerway	7620	0379	9/5/62, 10/19/62, 4/1/63	NAS48	64-9	D0203-102	------
1.13	Mobile Servicing Structure	7620	1560	4/11/63, 5/13/63, 9/11/63	NASA131	65-1	D0203-208	------
1.14	High Pressure Gas Facility							
	CCF Building	7620	1559	6/13/63	NASA48	64-9	D0203-102	K7-468
	VAB Gas Storage Structure	7620	2569, 0694, 0695	11/16/62	NASA61	64-13	D0201-28, 297	K7-853
	Pad Gas Storage Structure	7620	1686	12/19/62	NASA48	64-9	D0203-102	J8-1709
1.15	Launch Pad	7620	1686	12/19/62	NASA48	64-9	D0203-102	J8-1708
1.16	Propellant Facilities	7620	168	12/19/62	NASA48	64-9	D0203-102	
	See Item No. 2.17 for system installation information.							
1.17	Operations Support Building	7620	FR64F158	--------	------	65081	D0203-336	J8-1503, J8-1614
1.18	Flame Deflector	7620	--------	--------	------	-----	---------	-------
1.19	Azimuth Alignment Building	7620	068	12/19/62	NASA48	64-9	D0203-102	-------
1.20	Launch Area Camera Sites	7620	068	12/19/62	NASA48	64-9	D0203-102	-------
1.21	Instrumentation Building	7620	2361	10/30/63	NASA110	64-54	D0203-181	K7-1557
2.1	Operational InterCom LC39 System Installation	7620	----	6/10/63	NASA115	NEG64-1	D0203-302, 203-306	
2.2	Operational Paging LC39 System Installation	7620	Installed as part of facilities contract.					
2.3	Operational Television LC39 System Installation	7620	-----	6/10/63		65-62	D0203-320	--------
2.4	Water System VAB Area	7620	0569, 0694, 0695	11/16/62	NASA61	64-13	D0203-28, 297	K6-994-995-945

*Item No. refers to paragraph where discussed.

Item No.*	Name	Project No.	Design Criteria No.	Design Criteria Date	Contract No.	Construction Spec. No.	Construction Drwg. No.	Bldg. No.
	Pad Booster Pumps	7620	0379	9/5/62	NASA48	64-9	DO203-102	J7-1388
	Pad Industrial Water	7620	FR0686	6/10/63	NASA76	64-44	DO203-123	------
	Controls (Pad)	7620	------	6/7/63	NASw410		NASA64-K-F-363	------
2.5	Electrical Power System							
	69KV Substation VAB	7624	------	-------	NASA51	64-18	DO203-112	K6-1141
	VAB Area Distribution	7620	0569, 0694, 0695	11/16/62	NASA61	64-13	DO203-28, 297	-------
	Pad Area Distribution	7620	0379, 0686	9/5/62, 12/19/62	NASA48	64-9	DO203-112	-------
	ML Power	See Item 1.9						
	MSS Power	See Item 1.13						
2.8	Fire Alarm System	7620	Installed as part of facilities contract.					
2.9	Area Warning System	7620	0686	12/19/62	NASA48	64-9	DO203-102	
2.10	Pneumatics Systems	7620	----	-------	NAS10-1138	75M04871	75M04870	
2.11	Hazards Monitoring System	7620	-----	-------	--------	--------	-------	--------
2.12	High Intensity Lighting System	7620	-----	-------	--------	--------	-------	--------
2.15	Compressed Air Systems							
	Pad	7620	0686	12/19/62	NASA48	64-9	DO203-102	J8-1659
	MSS	7620	0560	4/11/63	NASA131	65-1	DO203-208	
	Pad Water Station	7620	1379	9/5/62	NASA76	64-9	DO203-102	
	Utility Annex	7620	----	10/22/62	NASA61	64-13	DO203-28, 297	
	RP-1 Foam	7620	0686	12/19/62	NASA48	64-9	DO203-102	J8-1564
2.17	Propellant Systems							
	RP-1	7620	----	--------	NAS10-1138	75M05867	75M05432	J8-1563
	LH_2	7620	----	--------	NAS10-1138	75M05752	75M05754	
	LOX	7620	----	--------	NAS10-1138	75M05869	75M05868	
	PTCS	7620	75M13576	75M13621	NASw410	75M13588	75M13607	
3.1	Manned Spacecraft Operations Bldg.	7623	101	9/25/63	NASA803	63-5	DO203-27, 811	M7-355
		7623	083	10/15/63	NASA1439	64-21	DO203-28, 134	

*Item No. refers to paragraph where discussed.

Item No.*	Name	Project No.	Design Criteria No.	Design Criteria Date	Contract No.	Construction Spec. No.	Construction Drwg. No.	Bldg. No.
		7649 7660			NASA88 NASA146	64-47 64-56	D0203-159 D0203-195	
3.2	Spacecraft, Spares & Equipment Supply, Shipping and Receiving	7623 7622	1398 045	8/5/62 12/30/62	NASA1973 NASA70	63-40 64-19	D0203-28, 177	M7-504
	Supply and GSE	7637	0938	5/2/63	NASA50	64-17	D0203-110	M7-505
3.3	Parachute Building	7637	1254	3/4/64	NASA20	64-1	D0203-28, 362/3	M7-657
3.4	RF Systems Test	7637	1253	5/7/63	NASA37	64-12	D0203-28, 399	M7-863 M7-867
3.5	Ordnance Field Test Laboratory	7649	1101	12/31/63	NASA97	64-49	D0203-163	M7-1417
3.6	Ordnance Storage Building	7623	64F152	-------	NASA50	64-17	D0203-110	M7-1472
3.7	Pyrotechnic Installation Building	7623	-----	1/16/63	NASA1446 NASA14	63-5 63-5	D0203-28, 343 D0203-28, 343	M7-1459
3.8	Flight Crew Training Buildings	7660	64F190	-------	NASA159	65-27	D0203-252	M7-409
3.9	Life Support Test Building	7623	0938/0939	11/16/62	NASA1970 NASA137	63-35 65-13	D0203-28, 155 D0203-203	M7-961
3.10	Hypergolic Test Buildings #1 #2	7623 7649	0936/0937 2381	11/5/62 8/19/63	NASA1970 NASA127	63-35 63-28	D0203-28, 155 D0203-116	M7-1212 M7-1210
3.11	Cryogenic Test Buildings #1	7623 7626	0938/0939 2382	11/16/62 8/1/63	NASA1970 NASA127	63-35 64-38	D0203-28, 155 D0203-116	M7-1412 M7-1413
3.12	Fluid Test Support Building	7623 7649	0936/0937 009	11/5/62 10/14/63	NASA1970 NASA24	63-35 64-6	D0203-154 D0203-155	M7-1061
3.13	Propulsion Test Facility	7626	---------	-------	NASA176	65-37	D0201-278	LC16-CKAFS

*Item No. refers to paragraph where discussed.

Item No.*	Name	Project No.	Design Criteria No.	Design Criteria Date	Contract No.	Construction Spec. No.	Construction Drwg. No.	Bldg. No.
4.1	Central Instrumentation Facility	7646	1194	5/13/63	NASA67	64-22	DO203-102	M6-342
4.2	Communications Distribution and Switching Center	7624 7641	64F135 64F135	------- -------	NASA1751 NASA158	63-28 65-25	DO203-28, 085 DO203-216	M6-138
4.3	Vehicle Maintenance Facility							
	GSA Vehicle Facility	7657	FR2182	-------	NASA212	65-55	DO203-264	M6-881
	Heavy Equipment Shop	7647	FR2182	-------	NASA212	65-55	DO203-264	M6-487
4.4	Plant Maintenance Facility	7634 7642	------ 1952	------- 1/10/64	NASA2 NASA114	63-39 64-61	DO203-28, 176 DO203-173	M6-486
4.5	MIIA Heat Plant	7624	------	-------	NASA1759	63-29	DO203-28, 094	M6-595
4.6	MIIA Sewage Treatment Plant	7624	------	-------	NASA1759	63-29	DO203-28, 094	M6-895
4.7	MIIA Water System	7624 7641	------ ------	------- -------	NASA4 NASA153	63-42 65-22	DO203-28, 232 DO203-218	M6-896
4.8	MIIA Electrical Power System	7624	------	-------	NASA1759	63-29	DO203-28, 094	M6-996
4.9	MIIA Fire Station	7640	------	-------	NASA17	63-4	DO203-28, 312	M6-695
4.10	Railroad System	7638 7641	FR1120	1/10/63	NASA21 NASA101 NASA167	64-4 64-53 65-30	DO203-28, 309 DO203-183 DO203-241	
5.1	Universal Camera Sites Pads 12, 13, 15 and 18	7654	FA019	12/26/63	ENG36	64-23	DO203-179	J8-2228 H4-1725 K8-1403 K6-2498
5.2	Trailer Maintenance Facility	----	-------	-------	-------	------	----------	--------
5.3	Propellant Systems Component Laboratory	3884	FR64F147	-------	NASA54	64-28	DO203-117	H5-99
5.4	Propellant Transporter Cleaning Facility	----	-------	------	-------	-----	----------	--------

*Item No. refers to paragraph where discussed.